STEYRMOTORS
INNOVATION WITH LIGHTNESS

# STEYR MARINE ENGINES

## 114 MARINE
TURBO DIESEL
+SOLAS

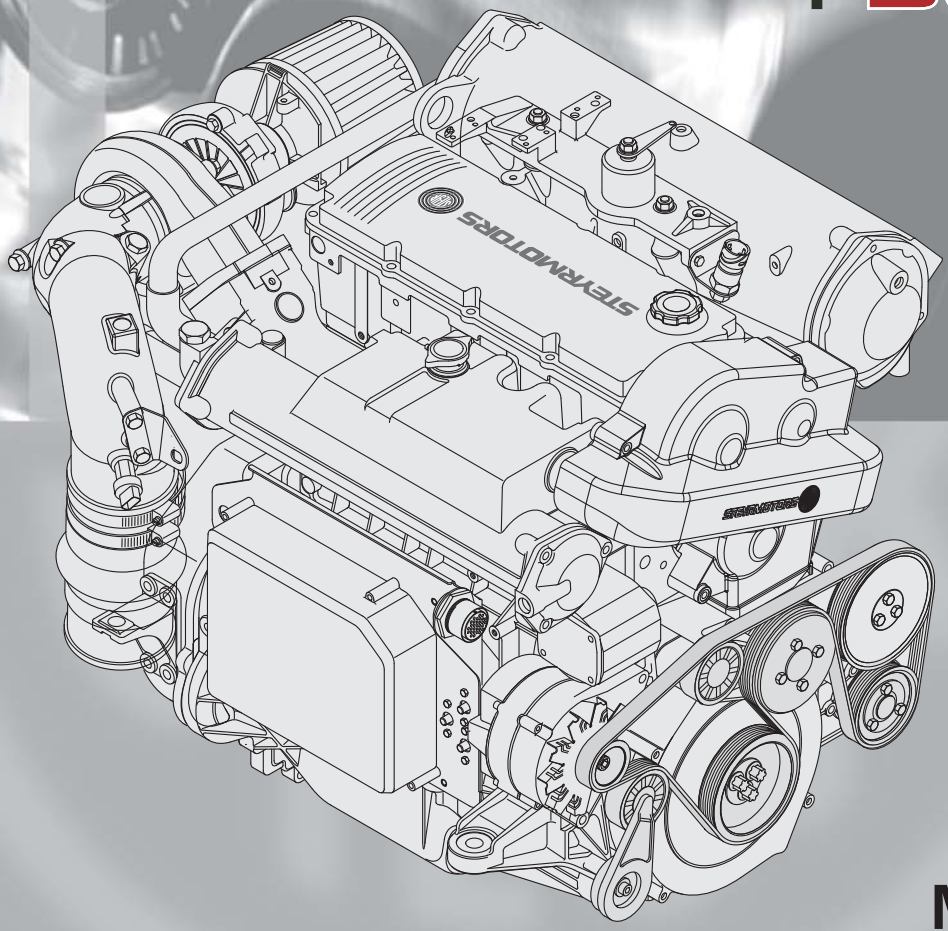


## MO114K33

**Serial no.: 48224 001 -->**

# SPARE PARTS CATALOGUE

**P/N Z001032-0 3rd Edition, May 2011**

**TEL** ++43 / 7252 / 222 / 20 **FAX** ++43 / 7252 / 222 / 29 **@** e.sales@steyr-motors.com

www.steyr-motors.com

**STEYR MOTORS GmbH**
**Im Stadtgut B1, A-4407 Steyr-Gleink, AUSTRIA**

When ordering spare parts are always indicate serial engine number.
This will speed up delivery and help to avoid mistakes.

The primary model and serial number is located on the engine as illustrated. These numbers are required when requesting warranty and ordering parts.

## Model identification

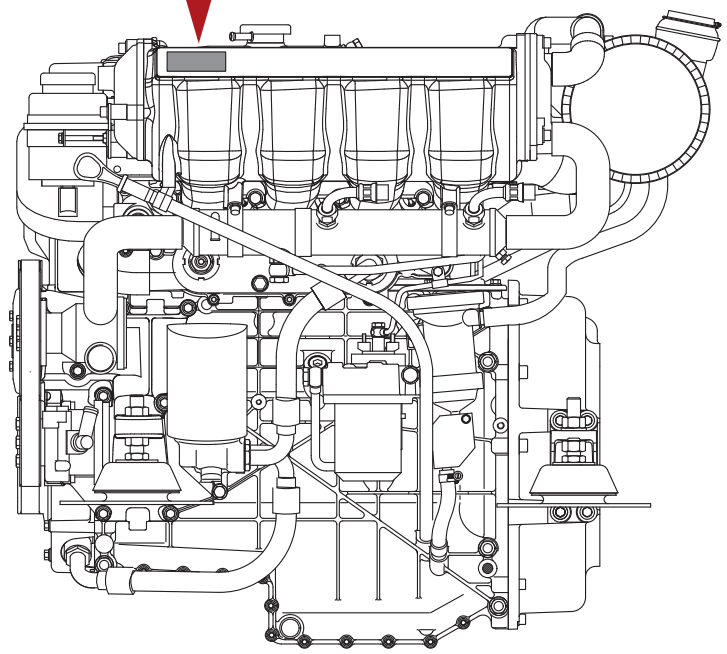

07001

**Substituting automotive or generally supplied parts and hardware will often result in less than desired performance. For this reason, you should insist on the known quality of genuine STEYR Marine matched replacement parts, and should never use parts of unknown quality.**

We reverse the right to make changes in design and execution which incorporate advances in technology!

# SIGNS AND SYMBOLS

1

STEYRMOTORS
INNOVATION WITH LIGHTNESS

TA 0101

CYLINDERBLOCK

114 MARINE TURBO DIESEL +SOLAS

2 01014084-0

3 4 5 6 8 9 7

| Pos. | Part.-No. | Qty | Designation | Step |
|---|---|---|---|---|
| 24 | Z002676-0 | 1 | SPARE PART COVER T-BELT —>48226146 | .2 |
| 26 | 2203711-1 | 1 | COVER T-BELT, UPPER PART 48226147—> | .2 |
| 28 | 9000538-0 | 3 | HEX.FLANGE BOLT EN 1665-M6x50 A2-70 | .2 |

**1** Table number

**2** Partlist number for whole table/ functional groups

**3** Positions number

**4** Spare part number

**5** Quantity for one engine respectively assembly group

**6** Designation and description of spare part

**7** Groupparts are marked with a circle around the position number. Parts in the list below these, which had an increased step number by one, will be included at delivery.

**8** **—> 4.....** Arrow before engine number: Spare part UNTIL and LOWER

**9** **4..... —>** Arrow past engine number: Spare part FROM and HIGHER

## ACROBAT

... back to "starting point"

... one page back

... one page vorward

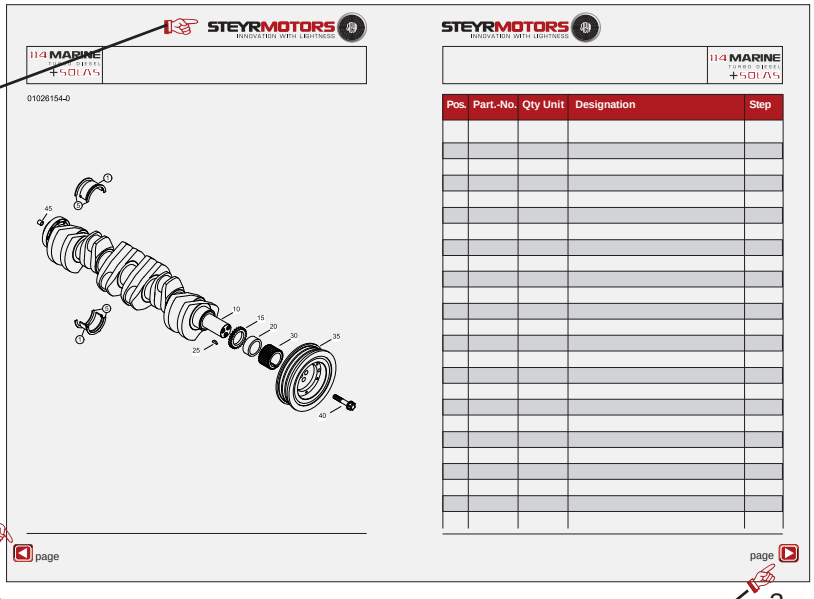

114 MARINE
TURBO DIESEL
+SOLAS

# TABLE OF CONTENTS - SPARE PARTS CATALOGUE


**TA 0100 Page 10**
MOUNT BRACKET, LIFTING EYE, GASKET SET

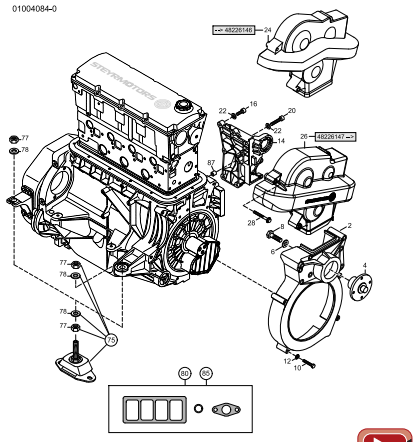


**TA 0101 Page 12**
CRANKCASE

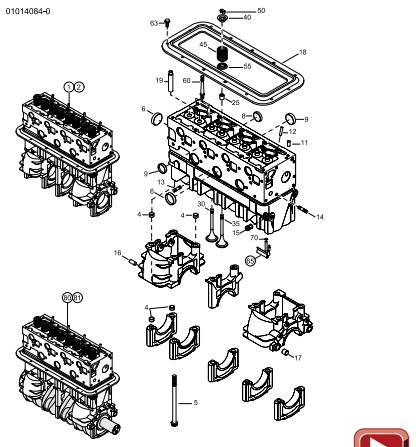


**TA 0102 Page 14**
CRANKSHAFT, BEARING, DAMPER

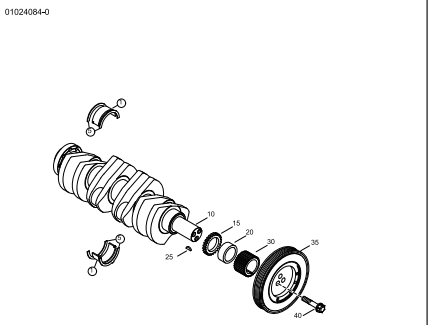


**TA 0103 Page 16**
FLYWHEEL, FLYWHEELHOUSING

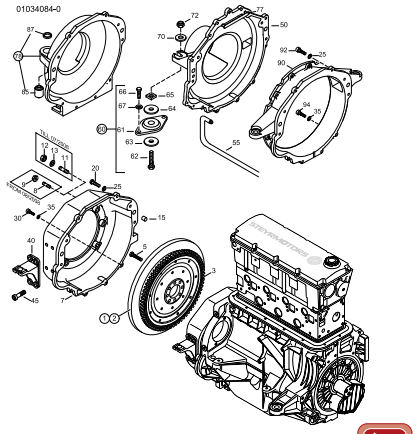


**TA 0104 Page 20**
PISTON, RINGS AND PIN, CONNECTION ROD

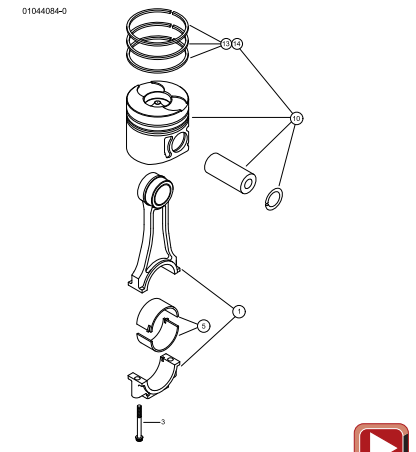


**TA 0105 Page 22**
CAMSHAFT, HOUSING

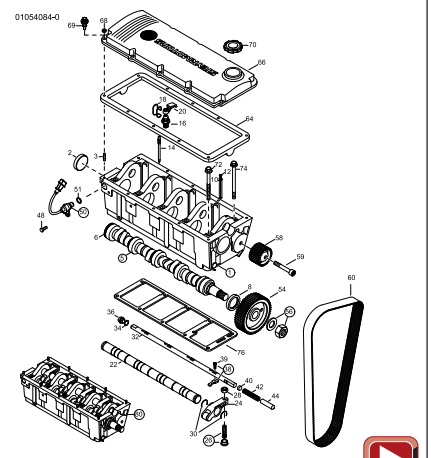


**TA 0106 Page 26**
OILPUMP, OILPIPE, OILPAN

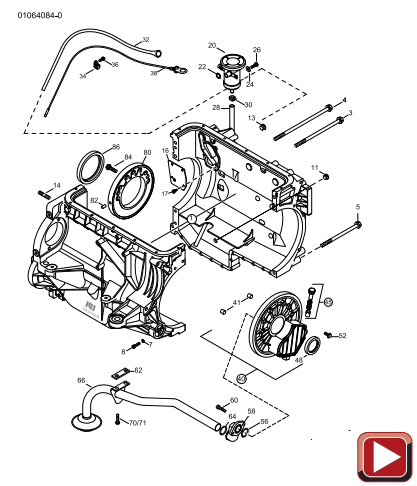


**TA 0108 Page 30**
INTERCOOLER

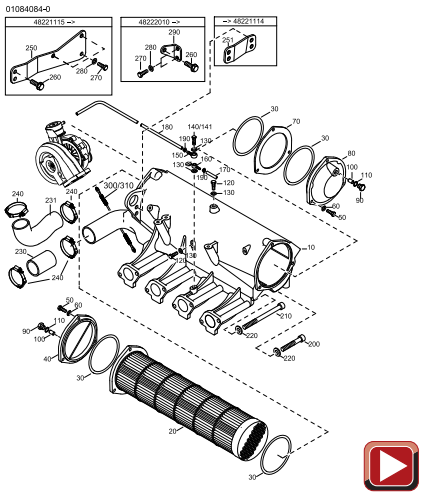


**TA 0109 Page 34**
POWER TAKE OFF FRONT

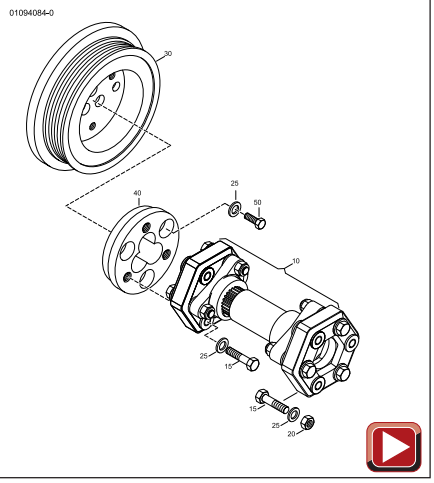

# TABLE OF CONTENTS - SPARE PARTS CATALOGUE

114 MARINE
TURBO DIESEL
+SOLAS


**TA 0113 Page 36**
OILCOOLER

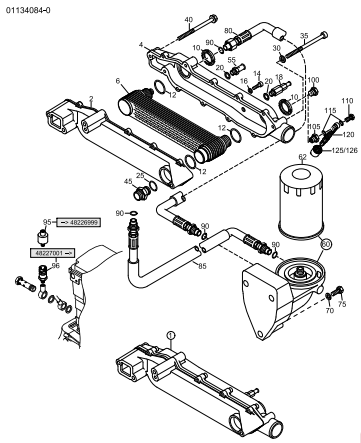


**TA 0114 Page 40**
EXHAUST, HEAT EXCHANGER, GASKET

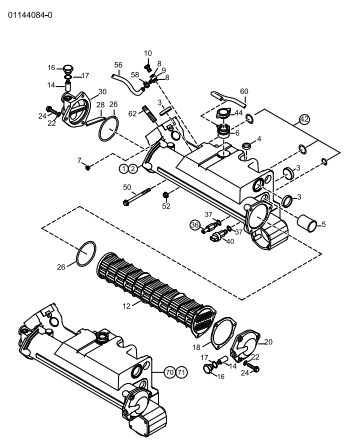


**TA 0201 Page 44**
COUPLER

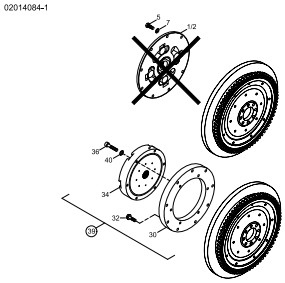


**TA 0302 Page 46**
FUEL PUMP, UNIT INJECTOR, PIPE

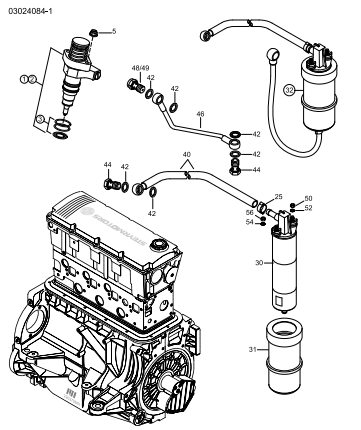


**TA 0304 Page 48**
AIRFILTER

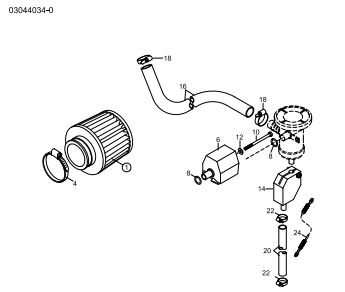


**TA 0305 Page 50**
TURBO

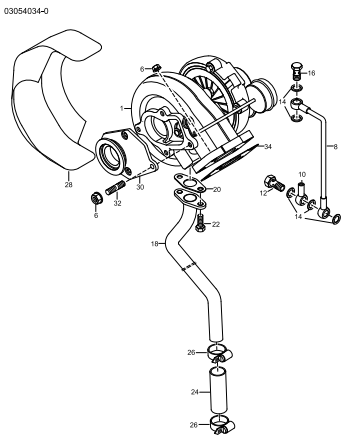


**TA 0308 Page 52**
CONTR. SOLENOID, POTENTIOMETER

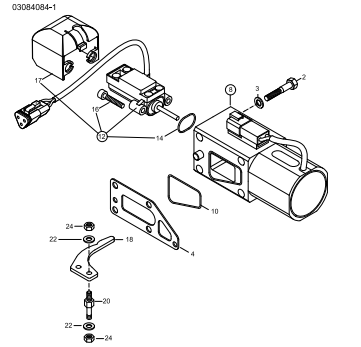


**TA 0309 Page 54**
FUEL FILTER

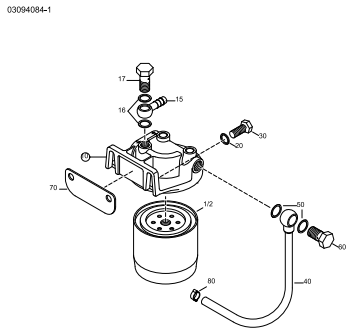


**TA 0311 Page 56**
GLOW PIN

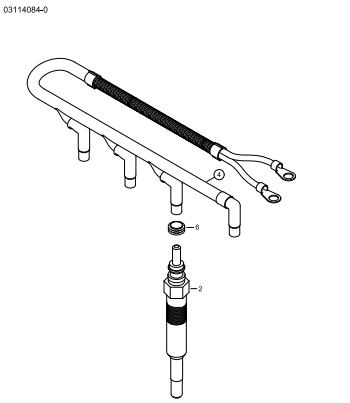

114 MARINE
TURBO DIESEL
+SOLAS

# TABLE OF CONTENTS - SPARE PARTS CATALOGUE


**TA 0312 Page 58**
POT. ACCELE., BOOST PRESSURE SENSOR

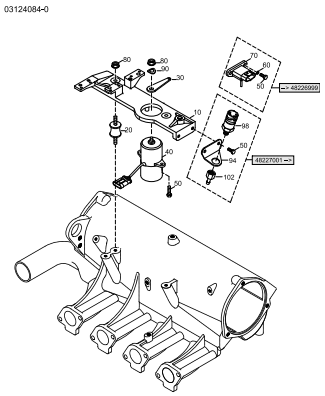


**TA 0401 Page 60**
HIGH RISER, EXHAUSTPIPE

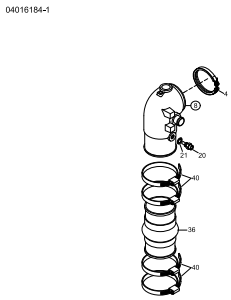


**TA 0503 Page 62**
WATERPIPE, THERMOSTAT

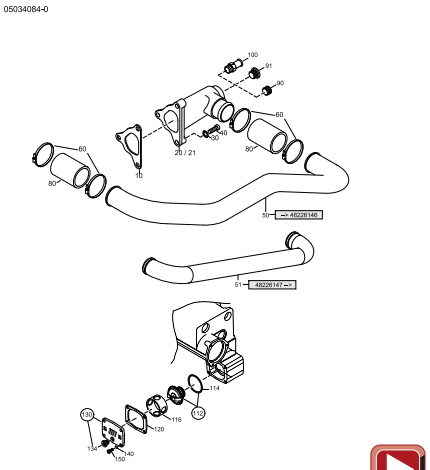


**TA 0504 Page 64**
WATERPUMP

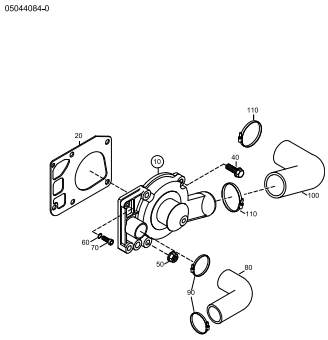


**TA 0505 Page 66**
DRIVE BELTS, PULLEYS, TENSIONER

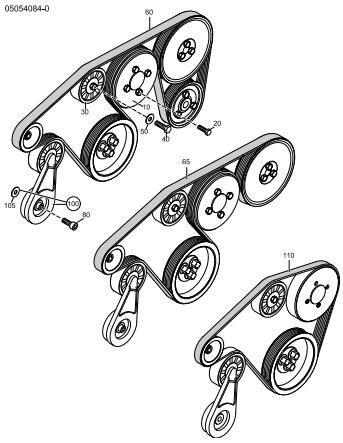


**TA 0510 Page 68**
RAW WATER PUMP

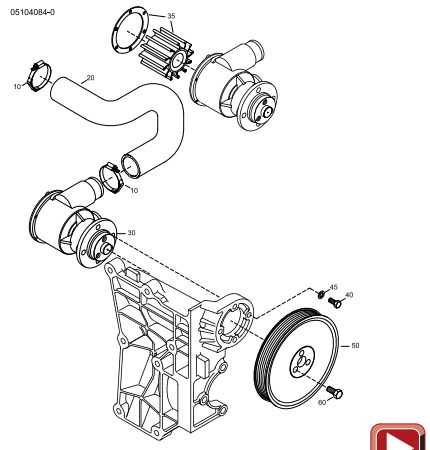


**TA 0512 Page 70**
RAW WATER PIPES, FUEL-OIL COOLER

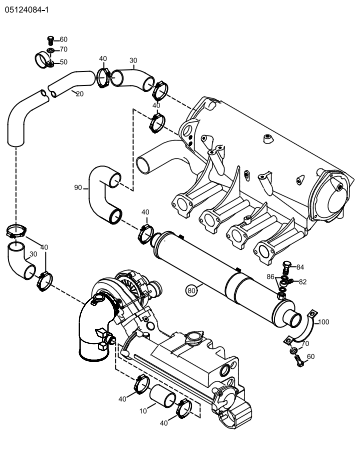


**TA 0601 Page 72**
ALTERNATOR

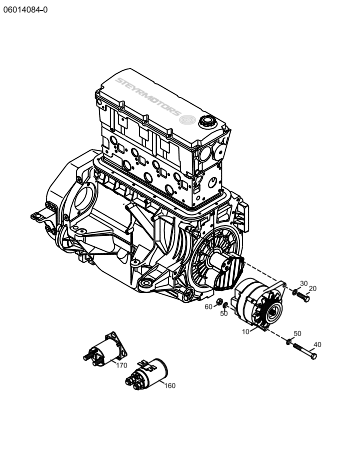


**TA 0603 Page 74**
STARTING

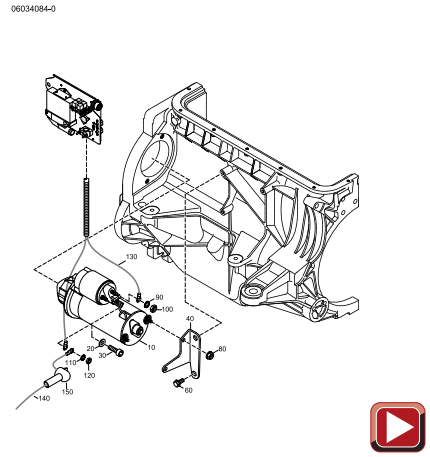

STEYRMOTORS
INNOVATION WITH LIGHTNESS

# TABLE OF CONTENTS - SPARE PARTS CATALOGUE

114 MARINE
TURBO DIESEL
+SOLAS


**TA 0605 Page 76**
ENGINE HARNESS

48221067 --> 48226999

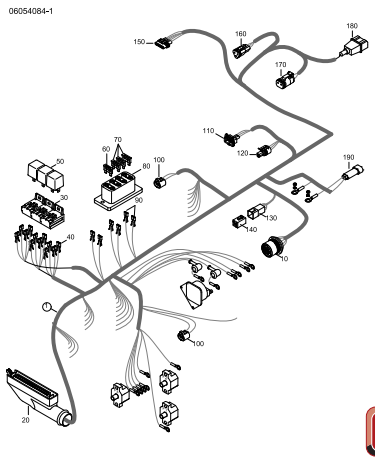


**TA 0605 Page 78**
ENGINE HARNESS

48227001 -->

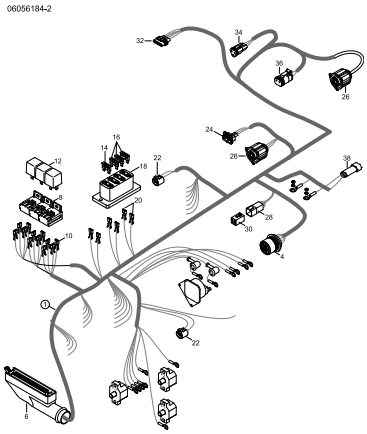


**TA 0606 Page 80**
SECURETYSYSTEM, FUSES, ECU, E-BOX

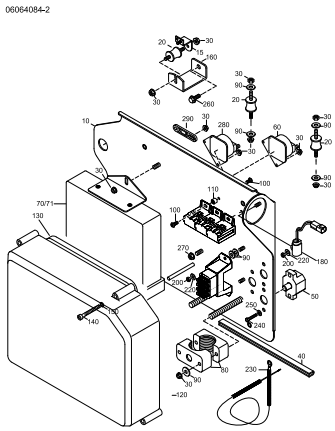


**TA 0608 Page 82**
INSTRUMENT PANEL (STANDARD)

TILL -->2010

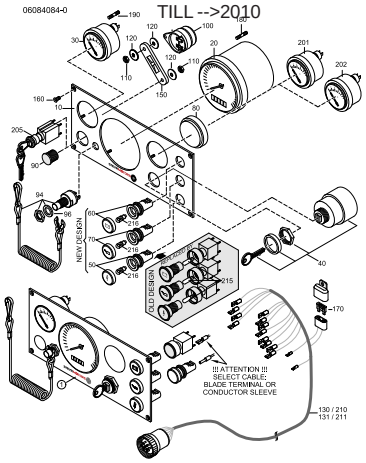


**TA 0607 Page 84**
INSTRUMENT PANEL (STANDARD)

FROM 2010-->

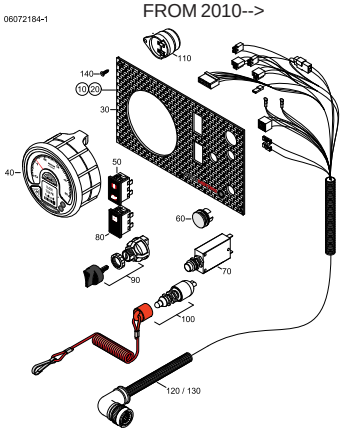


**TA 0609 Page 86**
INSTRUMENT PANEL SOLAS (STANDARD)

TILL -->2010

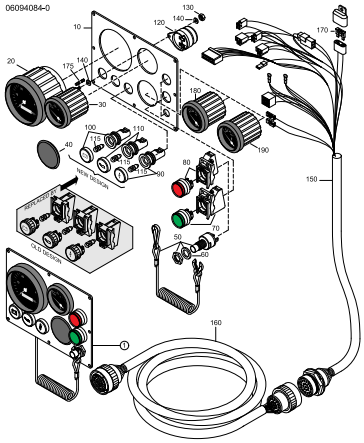


**TA 0609 Page 88**
INSTRUMENT PANEL SOLAS (STANDARD)

FROM 2010-->

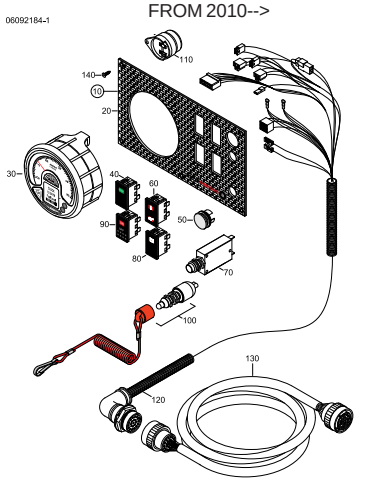


**TA 0610 Page 90**
DISPLAY

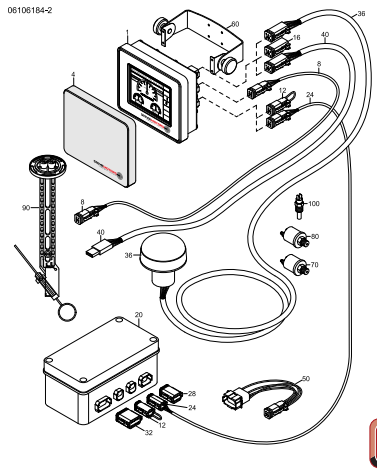


**TA 0611 Page 92**
SWITCH PANEL FOR DISPLAY

TILL -->2010

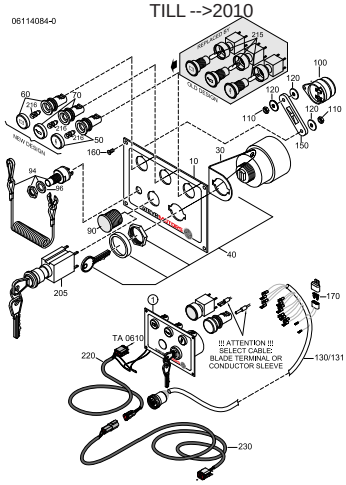

114 MARINE
TURBO DIESEL
+SOLAS

# TABLE OF CONTENTS - SPARE PARTS CATALOGUE


**TA 0611 Page 94**
SWITCH PANEL FOR DISPLAY

FROM 2010-->

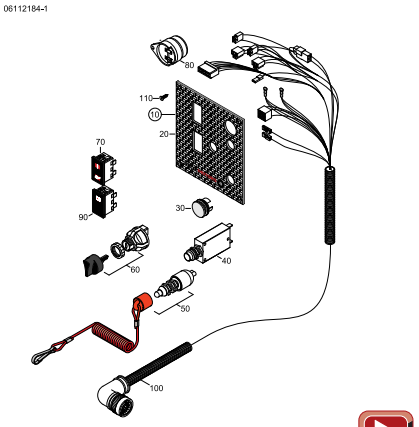


**TA 0612 Page 96**
PUSH BUTTON PANEL SOLAS FOR DISPLAY

TILL -->2010

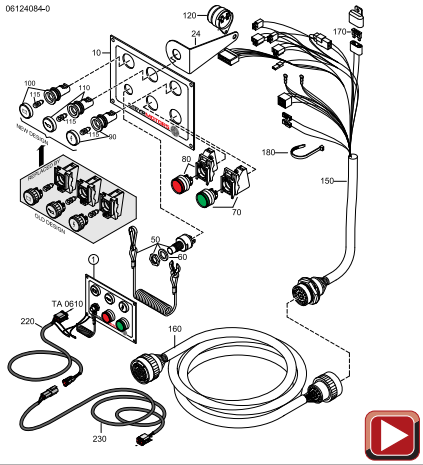


**TA 0612 Page 98**
PUSH BUTTON PANEL SOLAS FOR DISPLAY

FROM 2010-->

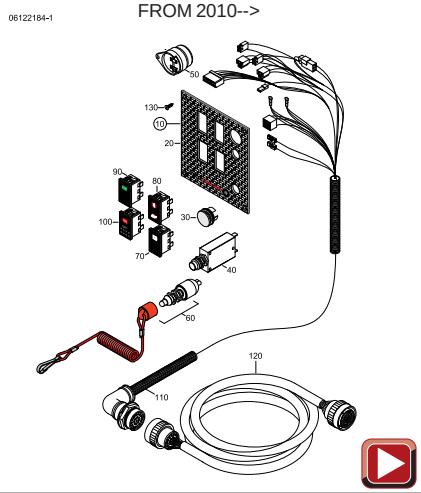


**TA 0613 Page 100**
EXTENSION CABLE INSTRUMENTS

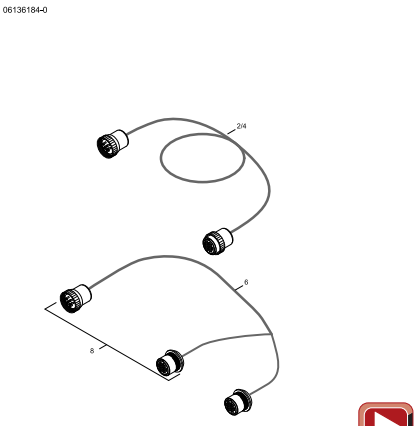


**TA 0700 Page 102**
TRANSMISS., MOUNTING BRACKETS, PIPES

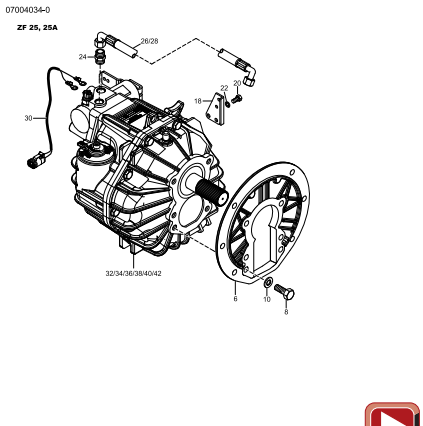


**TA 0701 Page 104**
TRANSMISSION-SHAFT, PTO-SHAFT (ALU)

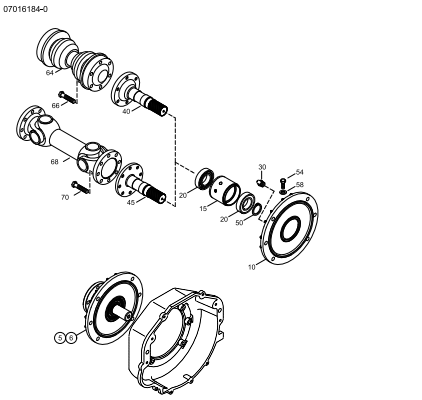


**TA 0705 Page 106**
TRANSMISSION GEAR SHIFT, CONTROLS

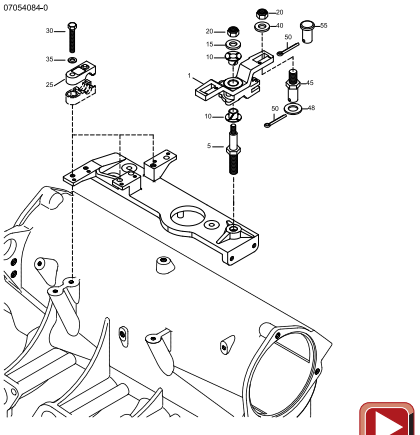


**TA 1408 Page 108**
HYDRAULIC PUMP

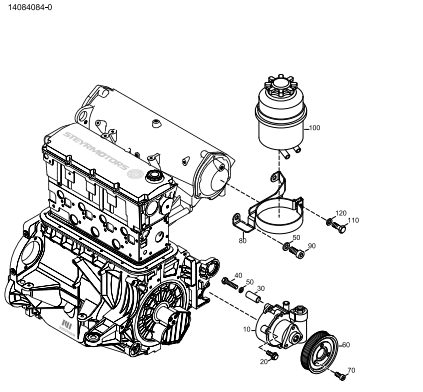


**TA 1409 Page 110**
HYDRAULIC PIPES

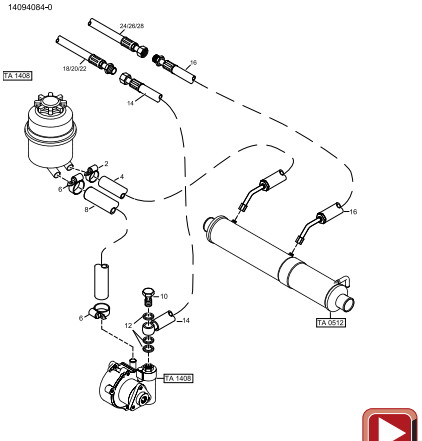

# TABLE OF CONTENTS - SPARE PARTS CATALOGUE

114 MARINE
TURBO DIESEL
+SOLAS


**TA 2207 Page 112**
ENGINE PREHEATING

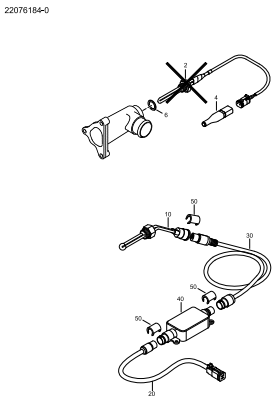


**TA 4000 Page 114**
INTEGR. FLYWHEELGENERATOR (IFG)

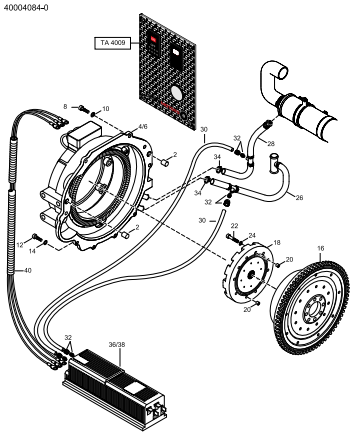


**TA 4009 Page 116**
PUSH BUTTON PANEL „IFG“

TILL -->2010

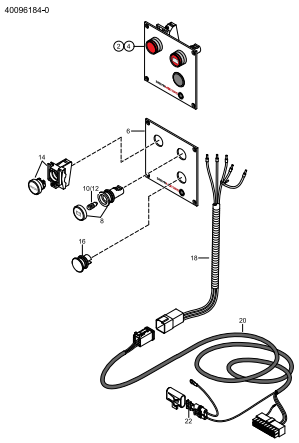


**TA 4009 Page 118**
PUSH BUTTON PANEL „IFG“

FROM 2010-->

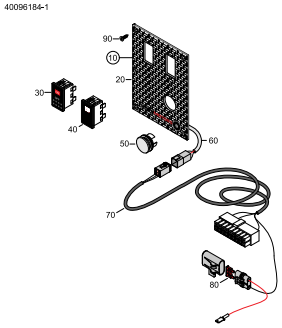


**TA 4100 Page 120**
HYBRID

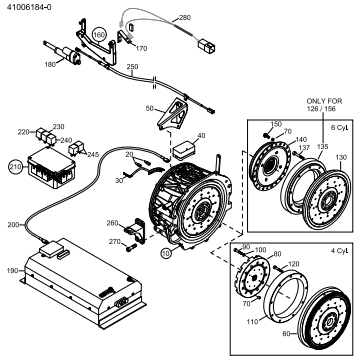


**TA 6012 Page 122**
HEATING UNIT, CIRCULATION PUMP

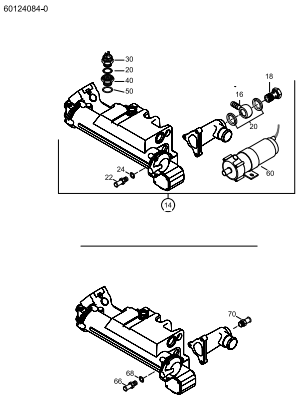

STEYRMOTORS
INNOVATION WITH LIGHTNESS

114 MARINE
TURBO DIESEL
+SOLAS

# MOUNT BRACKET, LIFTING EYE, GASKET SET

01004084-0

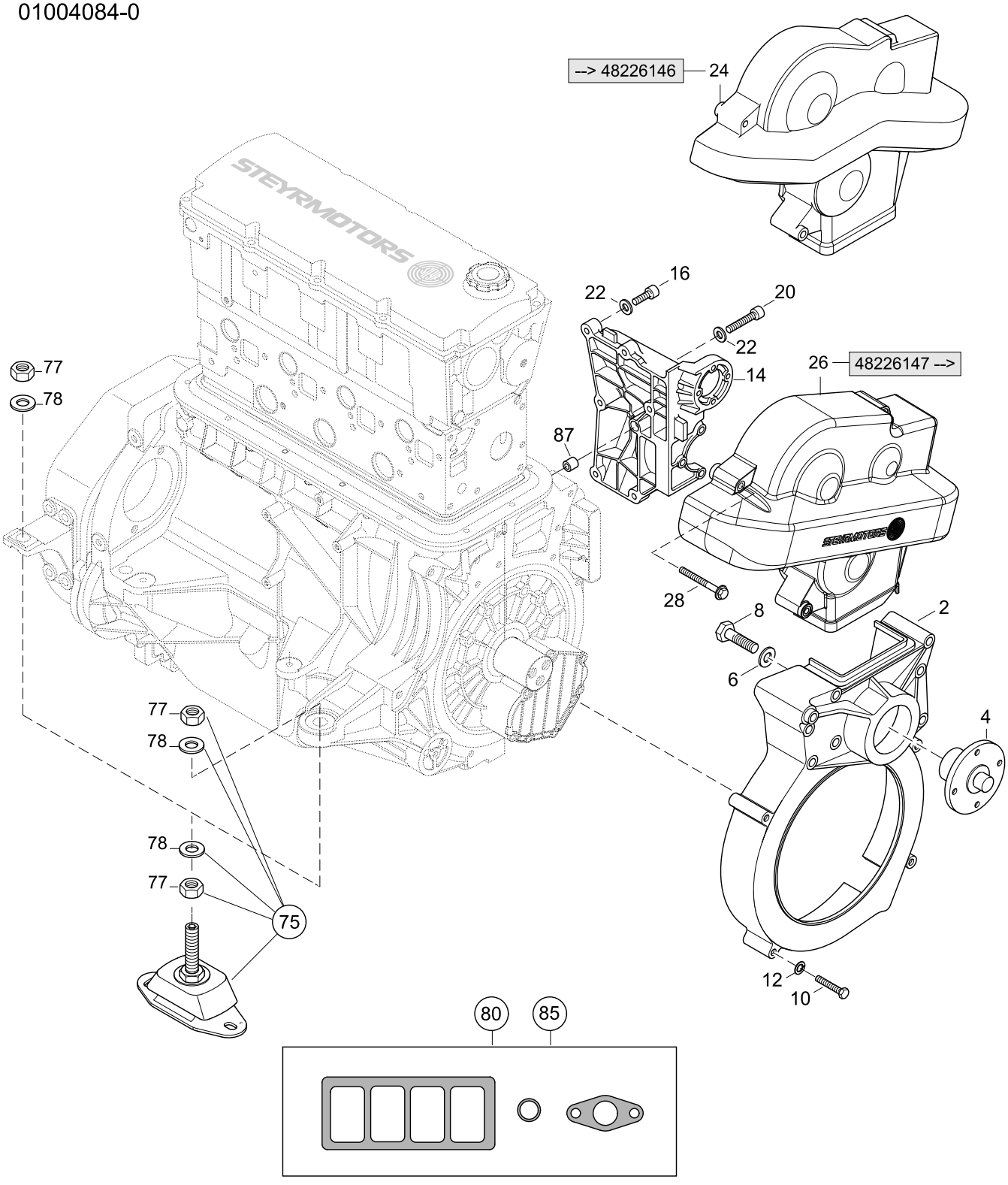

# MOUNT BRACKET, LIFTING EYE, GASKET SET

114 MARINE
TURBO DIESEL
+SOLAS

01004084-0

| Pos. | Part.-No. | Qty | Designation | Step |
|---|---|---|---|---|
| 2 | Z002406-0 | 1 | COVER T-BELT ASSY, LOWER WITH BEARING (PAINTED) | .2 |
| 4 | 2203516-2 | 1 | BEARING SHAFT | .2 |
| 6 | 2203563-0 | 1 | SUPPORT WASHER, BEARING SHAFT | .2 |
| 8 | 3802515-0 | 1 | HEX.HD.SCR. ISO 4017-M10x20-8.8-A3C | .2 |
| 10 | 9000289-0 | 11 | HEX.HD.BOLT ISO 4014-M6x65-8.8-A2C | .2 |
| 12 | 3930070-0 | 11 | WASHER DIN 125-6-140HV-A2 | .2 |
| 14 | Z002428-0 | 1 | BRACKET, ENGINE MOUNT (PAINTED (PAINTED) | .2 |
| 16 | 9000045-0 | 4 | HEX.SOCK. HD.CAP SCR. DIN 912-M8x40-8.8-DAC A500 | .2 |
| 20 | 3862466-0 | 3 | HEX.SOCK. HD.CAP SCR. DIN 912-M8x65-8.8-A2C | .2 |
| 22 | 3930103-0 | 7 | WASHER DIN 125-8.4-140HV-A2 | .2 |
| 24 | Z002676-0 | 1 | SPARE PART COVER T-BELT | .2 |
| 26 | 2203711-1 | 1 | COVER T-BELT, UPPER PART | .2 |
| 28 | 9000538-0 | 3 | HEX.FLANGE BOLT EN 1665-M6x50 A2-70 | .2 |
| 75 | 2203804-5 | 4 | ENGINE MOUNT ASSY 55SH | .2 |
| 77 | 9000442-0 | 2 | HEX.NUT ISO 8673-M18x1,5-8-A-DAC | ..3 |
| 78 | 9000441-0 | 2 | LOCKWASHER 19,5x34,5 | ..3 |
| 80 | Z002409-0 | 1 | SEAL KIT_4 CYL. MARINE ENGINE | .2 |
| 85 | Z002409-6 | 1 | SEAL KIT 4 CYL. MARINE ENGINE WO. FRAME SEAL | .2 |
| 87 | 2203543-0 | 2 | FITTING SLEEVE | .2 |

114 MARINE
TURBO DIESEL
+SOLAS

# CRANKCASE

01014084-0

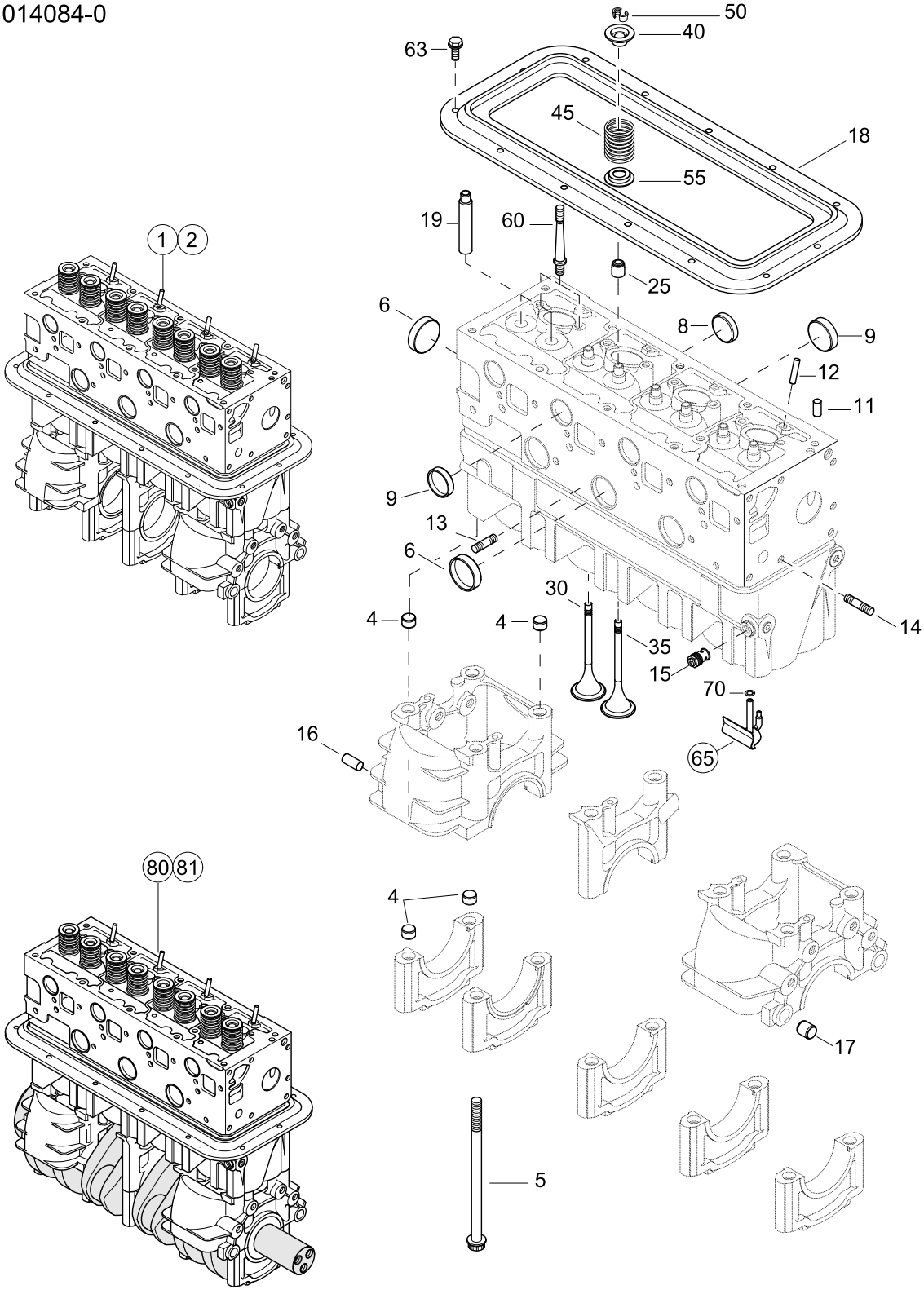

# CRANKCASE

114 MARINE
TURBO DIESEL
+SOLAS

01014084-0

| Pos. | Part.-No. | Qty | Designation | Step |
|---|---|---|---|---|
| 1 | MZ40084-0 | 1 | CYLINDER BLOCK ASSY. MARINE (INCL. VALVES) —>48227163 | .2 |
| 2 | MZ40084-1 | 1 | CYLINDER BLOCK ASSY. MARINE (INCL. VALVES) 48227164—> | .2 |
| 4 | 2172799-0 | 16 | FITTING SLEEVE DM14.5 (TO M12) | ..3 |
| 5 | 2174329-0 | 10 | BOLT, MAIN BEARING | ..3 |
| 6 | 2170309-0 | 4 | CORE HOLE PLUG 40/8 | ..3 |
| 8 | 2172676-0 | 2 | CORE HOLE PLUG 35/8 | ..3 |
| 9 | 2172170-0 | 3 | CORE HOLE PLUG 28/7 | ..3 |
| 11 | 3901416-0 | 2 | PARALLEL PIN ISO 2338-8m6x16-ST | ..3 |
| 12 | 3901328-0 | 4 | PARALLEL PIN ISO 2338-6m6x30-ST | ..3 |
| 13 | 9000327-0 | 2 | STUD DIN 939-M6x20-8.8-A2C | ..3 |
| 14 | 3812435-0 | 1 | STUD DIN 938-M8x35-8.8-A3C | ..3 |
| 15 | 2178525-1 | 1 | COOLING OIL VALVE ASSY. | ..3 |
| 16 | 3901509-0 | 2 | PARALLEL PIN ISO 2338-10m6x20-ST | ..3 |
| 17 | 2170298-0 | 2 | FITTING SLEEVE DM12.5 (TO M10) | ..3 |
| 18 | 2040217-0 | 1 | FRAME SEAL | ..3 |
| 19 | 2172133-N | 8 | VALVE GUIDE | ..3 |
| 25 | 2172096-1 | 8 | VALVE STEM SEAL | ..3 |
| 30 | 2177577-1 | 4 | EXHAUST VALVE | ..3 |
| 35 | 2177576-6 | 4 | INTAKE VALVE | ..3 |
| 40 | 2177349-0 | 8 | VALVE-SPRING RETAINER | ..3 |
| 45 | 2172362-0 | 8 | VALVE SPRING | ..3 |
| 50 | 2170171-0 | 16 | VALVE COLLET | ..3 |
| 55 | 2177415-0 | 8 | VALVE SPRING WASHER | ..3 |
| 60 | 2174321-1 | 8 | STUD UNIT INJECTOR | .2 |
| 63 | 9000287-0 | 13 | HEX.FLANGE BOLT EN 1665-M6x12-8.8 | .2 |
| 65 | 2178478-0 | 4 | SPRAYING NOZZLE ASSY | .2 |
| 70 | 2173533-0 | 4 | O-RING 5,23 x 2,62 | ..3 |
| 80 | MT40084-0 | 1 | PARTIAL ENGINE (BLOCK, PISTON, CR.S. & VALVES) —>48227163 | .2 |
| 81 | MT40084-1 | 1 | PARTIAL ENGINE (BLOCK, PISTON, CR.S. & VALVES) 48227164—> | .2 |

# CRANKSHAFT, BEARING, DAMPER

01024084-0

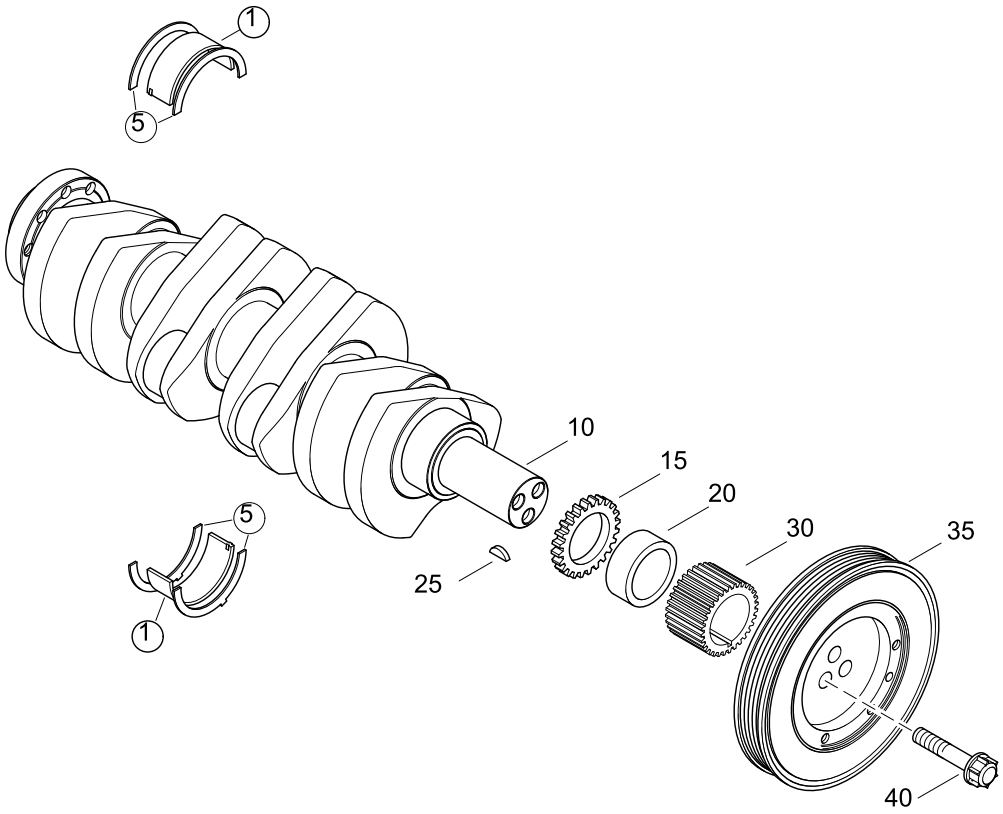

# CRANKSHAFT, BEARING, DAMPER

114 MARINE
TURBO DIESEL
+SOLAS

01024084-0

| Pos. | Part.-No. | Qty | Designation | Step |
|---|---|---|---|---|
| 1 | Z002003-0 | 5 | MAIN BEARING ASSY. CRANKSHAFT | .2 |
| 5 | Z002002-0 | 1 | AXIAL BEARING ASSY. CRANKSHAFT | .2 |
| 10 | Z002427-0 | 1 | CRANKSHAFT 4 CYL. (SPARE PART) | .2 |
| 15 | 2172584-0 | 1 | GEAR, OILPUMP DRIVE CRANKSHAFT | .2 |
| 20 | 2172316-0 | 1 | BARREL RING | .2 |
| 25 | 3960012-0 | 1 | WOODRUFFKEY DIN 6888-8x9 | .2 |
| 30 | 2172770-0 | 1 | SYNCHRONOUS BELT PULLEY CRANKSHAFT | .2 |
| 35 | 2203498-0 | 1 | TORSIONAL VIBRATION DAMPER | .2 |
| 40 | 2205328-0 | 3 | SCREW - VIBRATION DAMPER | .2 |

STEYRMOTORS
INNOVATION WITH LIGHTNESS

114 MARINE
TURBO DIESEL
+SOLAS

# FLYWHEEL, FLYWHEELHOUSING

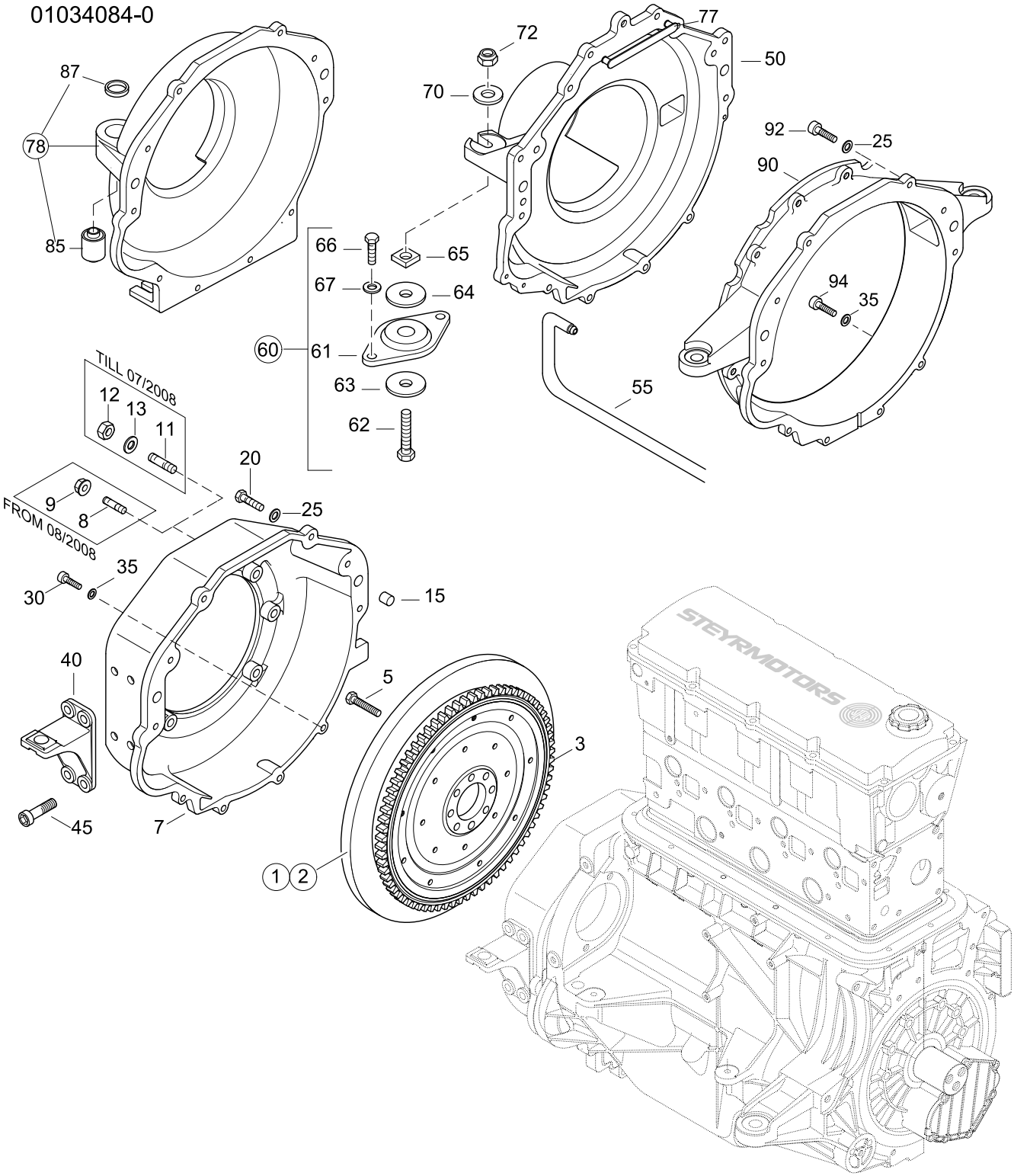

# FLYWHEEL, FLYWHEELHOUSING

114 MARINE
TURBO DIESEL
+SOLAS

01034084-0

| Pos. | Part.-No. | Qty | Designation | Step |
|---|---|---|---|---|
| 1 | 2203739-1 | 1 | FLYWHEEL ASSY. - DM56 —>48225999 | .2 |
| 2 | 2203739-2 | 1 | FLYWHEEL ASSY. - DM40 48226001—> | .2 |
| 3 | 2205031-0 | 1 | STARTER RING GEAR, FLYWHEEL | ..3 |
| 5 | 2174592-0 | 8 | HEX. HEAD SCREW M10x30-12.9 | .2 |
| 7 | Z002165-0 | 1 | SPARE FLYWHEEL HOUSING B/W FLANGE PAINTED | .2 |
| 8 | 9000371-0 | 6 | STUD DIN 835-M10x25-8.8-A3C | .2 |
| 9 | 9000042-1 | 6 | HEX.FLANGE NUT DIN 6923-M10-8-A3C | .2 |
| 11 | 9000082-0 | 6 | STUD DIN 835-M12x25-8.8-A3C | .2 |
| 12 | 3871319-0 | 6 | HEX.NUT ISO 4032-M12-8-A3C | .2 |
| 13 | 3930282-0 | 6 | WASHER DIN 125-A13-140HV-A3C | .2 |
| 15 | 3900184-0 | 2 | SPRING PIN, SLIGHT TYPE DIN 7346-16x22 | .2 |
| 20 | 3862545-0 | 5 | HEX.SOCK. HD.CAP SCR. DIN 912-M10x35-A2-70 | .2 |
| 25 | 3930075-0 | 5 | WASHER DIN 125 A10.5-140HV-A2 | .2 |
| 30 | 3862433-0 | 4 | HEX.SOCK. HD.CAP SCR. DIN 912-M8x30-A2-70 | .2 |
| 35 | 3930103-0 | 4 | WASHER DIN 125-8.4-140HV-A2 | .2 |
| 40 | 2178722-1 | 2 | BRACKET FLYWHEEL HOUSING | .2 |
| 45 | 9000081-0 | 8 | HEX.SOCK.HD.CAP SCR. DIN 912-M12x35-8.8-A3C | .2 |
| 50 | 2203733-9 | 1 | FLYWHEEL HOUSING OMC/VOLVO SX PAINTED | .2 |
| 55 | O913787-0 | 1 | HOSE-FLYWHEEL HOUSING | .2 |
| 60 | O986712-0 | 1 | SMALL PARTS REAR MOUNTS | .2 |
| 61 | O983932-0 | 2 | REAR MOUNT ASSY | ..3 |
| 62 | O318573-0 | 2 | BOLT, REAR MOUNT | ..3 |
| 63 | O911780-0 | 2 | WASHER-REAR MOUNT-LOWER | ..3 |
| 64 | O912889-0 | 2 | WASHER REAR MOUNT | ..3 |
| 65 | O911776-0 | 2 | SQUARE NUT-REAR MOUNT | ..3 |
| 66 | O309484-0 | 4 | HEX. SCREW 3/8-16UNCx1-1/4" | ..3 |
| 67 | O319453-0 | 4 | WASHER | ..3 |
| 70 | O911778-0 | 2 | WASHER, REAR MOUNT | .2 |
| 72 | O313623-0 | 2 | LOCK NUT, REAR MOUNT | .2 |
| 77 | 2178504-0 | 2 | COVER | .2 |

114 MARINE
TURBO DIESEL
+SOLAS

# FLYWHEEL, FLYWHEELHOUSING

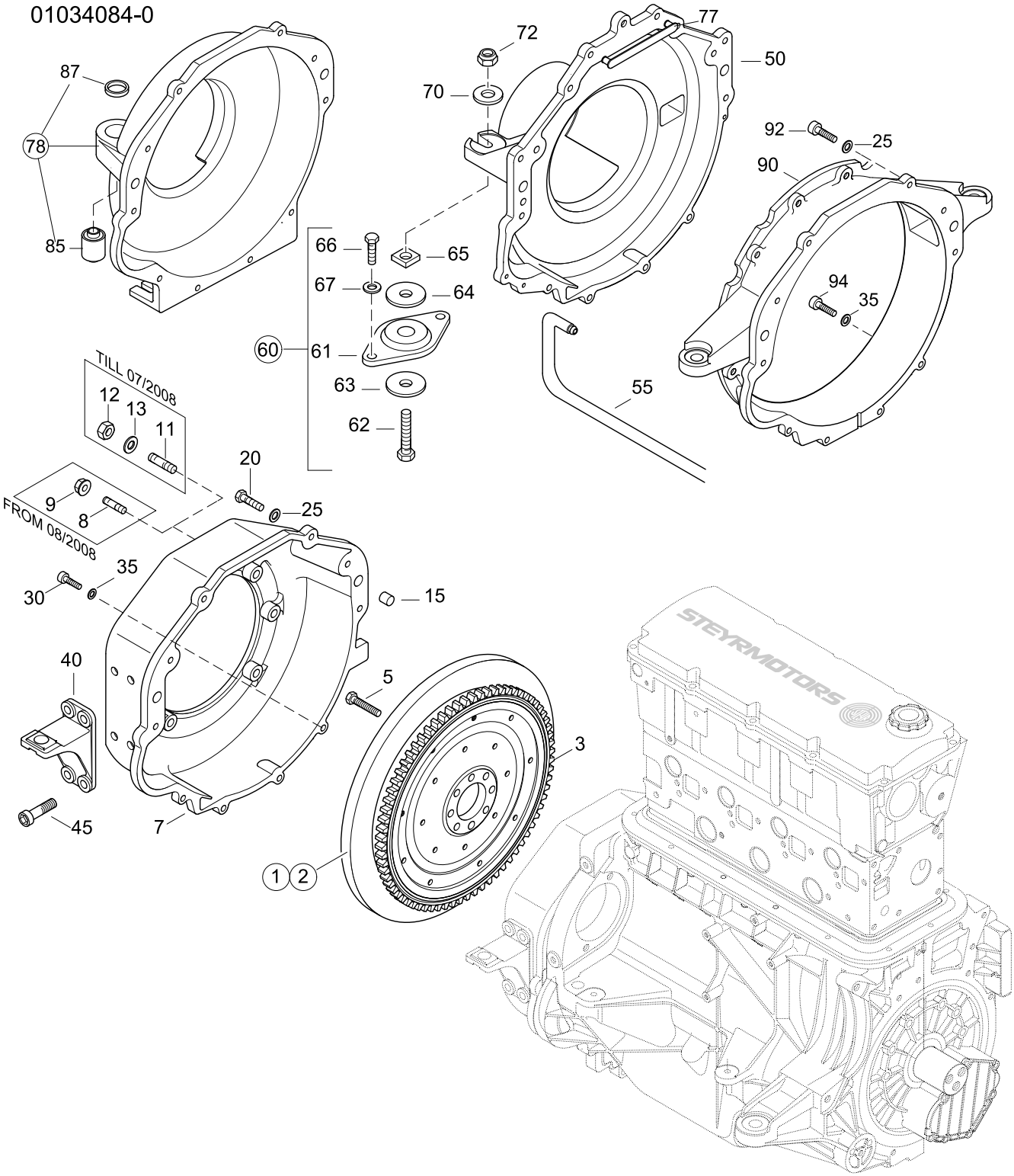

# FLYWHEEL, FLYWHEELHOUSING

114 MARINE
TURBO DIESEL
+SOLAS

01034084-0

| Pos. | Part.-No. | Qty | Designation | Step |
|---|---|---|---|---|
| 78 | 2178833-M | 1 | HOUSING FLYWHEEL MERCURY ASSY PAINTED | .2 |
| 85 | 2178876-2 | 2 | SINENT BLOCK F. FLY WHEEL HOUS ING ASYMMETRIC L=44,7 | ..3 |
| 87 | 2178877-0 | 2 | WASHER-REAR MOUNT-LOWER | ..3 |
| 90 | 2178052-9 | 1 | HOUSING FLYWHEEL SAE 4 PAINTED | .2 |
| 92 | 3860149-0 | 5 | HEX.SOCK. HD.CAP SCR. DIN 912-M10x40-8.8-A3C | .2 |
| 94 | 9000064-0 | 4 | HEX.SOCK. HD.CAP SCR. DIN 912-M8x35-8.8-A3C | .2 |

# PISTON, RINGS AND PIN, CONNECTION ROD

01044084-0

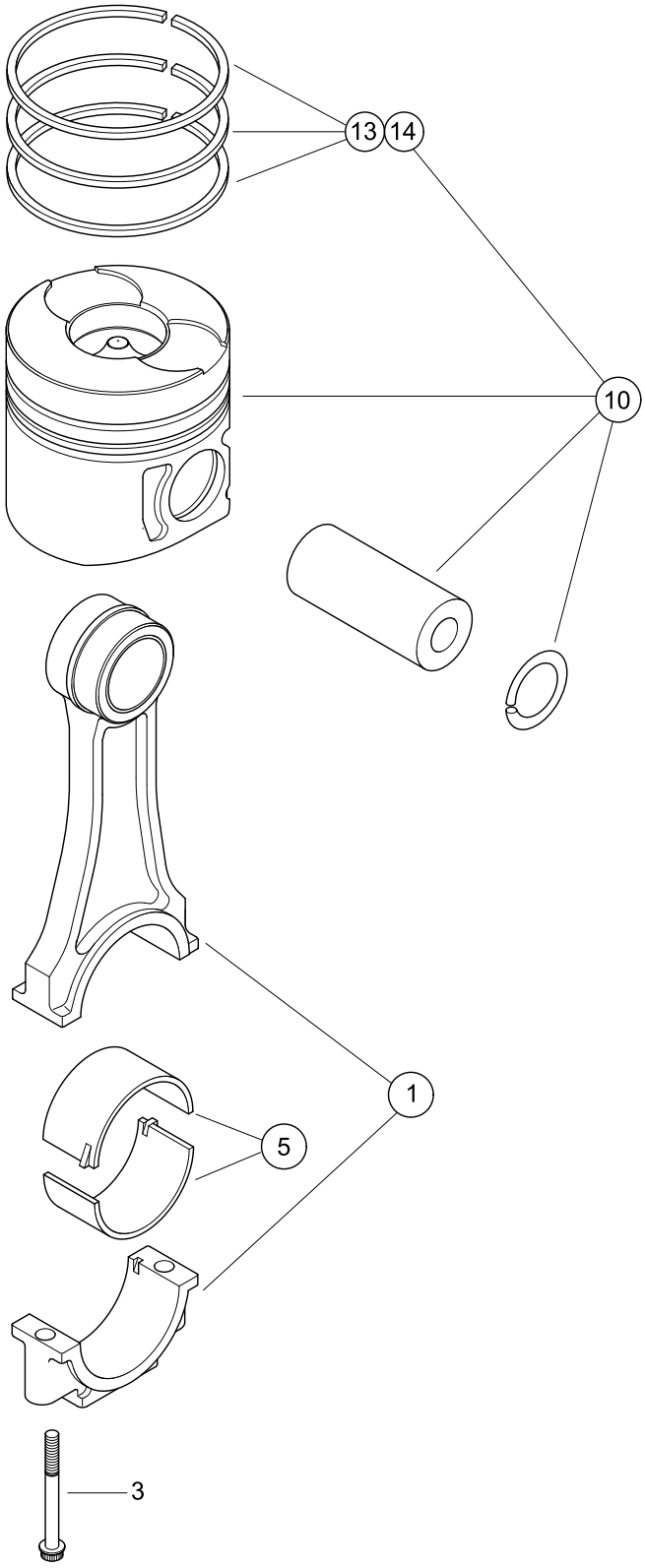

# PISTON, RINGS AND PIN, CONNECTION ROD

114 MARINE
TURBO DIESEL
+SOLAS

01044084-0

| Pos. | Part.-No. | Qty | Designation | Step |
|---|---|---|---|---|
| 1 | 2178675-0 | 4 | CONNECTING ROD ASSY. | .2 |
| 3 | 2178532-0 | 2 | CONROD SCREW | ..3 |
| 5 | Z002055-1 | 4 | BEARING ASSY. CONNECTING ROD | .2 |
| 10 | Z002142-0 | 4 | PISTON ASSY. | .2 |
| 13 | Z002060-0 | 1 | PISTON RING KIT (1 PER PISTON) —>48226118 | ..3 |
| 14 | Z002060-2 | 1 | PISTON RING KIT (1 PER PISTON) 48226119—> | ..3 |

114 MARINE
TURBO DIESEL
+SOLAS

# CAMSHAFT, HOUSING

01054084-0

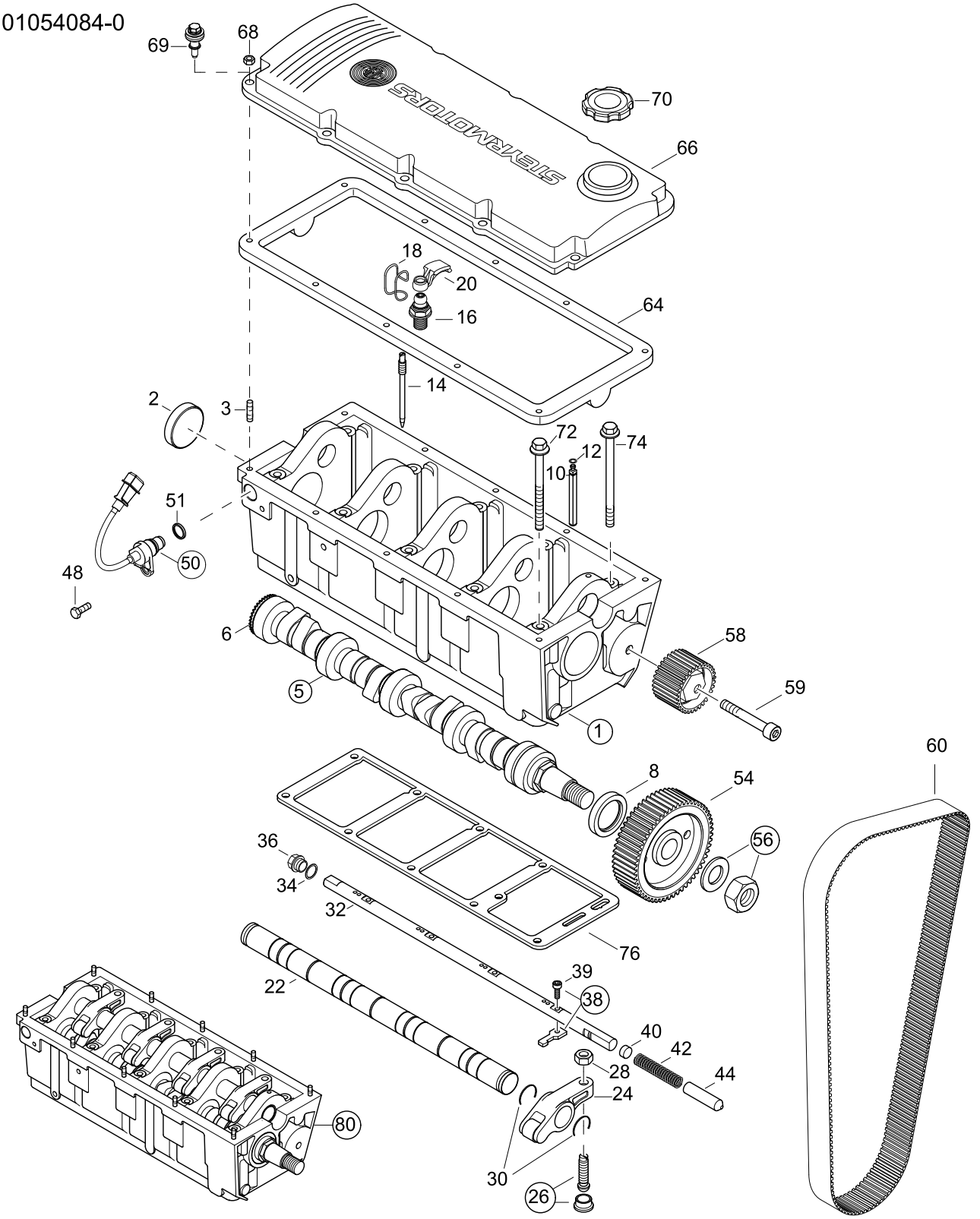

# CAMSHAFT, HOUSING

114 MARINE
TURBO DIESEL
+SOLAS

01054084-0

| Pos. | Part.-No. | Qty | Designation | Step |
|---|---|---|---|---|
| 1 | Z002407-0 | 1 | CAMSHAFT HOUSING ASSY. (PAINTED) | .2 |
| 2 | 2178083-0 | 1 | CORE HOLE PLUG 50-7 | ..3 |
| 3 | 2309101-0 | 10 | STUD DIN 835-M6x25-A2-70 —>482300551 | ..3 |
| 5 | 2203267-6 | 1 | CAMSHAFT ASSY. | .2 |
| 6 | 2203280-1 | 1 | SENSOR DISK | ..3 |
| 8 | 2172086-1 | 1 | ROTARY SHAFT SEAL | .2 |
| 10 | 2178486-1 | 1 | AXLE SUPPORT | .2 |
| 12 | 2178498-0 | 1 | QUAD RING 1,78 x 5,28 | .2 |
| 14 | 2177513-2 | 1 | GUIDE PIN CONTROL RACK | .2 |
| 16 | 2174546-2 | 8 | VALVE TAPPET ADJ. SCREW ASSY. | .2 |
| 18 | 2174552-0 | 8 | RETAINING SPRING | .2 |
| 20 | 2177139-1 | 8 | CAM FOLLOWER ASSY. | .2 |
| 22 | 2173694-1 | 1 | ROCKER ARM SHAFT ASSY. | .2 |
| 24 | Z002094-0 | 4 | ROCKER ARM ASSY. (SPARE PART) | .2 |
| 26 | Z002010-0 | 4 | TAPPET ADJUSTER ASSY. | .2 |
| 28 | 3871310-0 | 4 | HEX.NUT DIN 934-M10x1-8 | .2 |
| 30 | 2174036-0 | 8 | CRESCENT RING 28x1,5 | .2 |
| 32 | 2203289-0 | 1 | CONTROL ROD | .2 |
| 34 | 3098031-0 | 1 | SEALING RING DIN 7603-A26x31-CU | .2 |
| 36 | 3962043-0 | 1 | HEX.HD.SCR.PLUG DIN 7604-C-M26x1.5-ST-A3C | .2 |
| 38 | Z002009-0 | 4 | CONTROL LINK & BOLT | .2 |
| 39 | 3860140-0 | 1 | HEX.SOCK. HD.CAP SCR. DIN 912-M5x20-LH-10.9 | ..3 |
| 40 | 2203337-0 | 1 | SPACER | .2 |
| 42 | 2203338-0 | 1 | SPRING, CONTROL ROD | .2 |
| 44 | 2203460-0 | 1 | BOLT | .2 |
| 48 | 3800238-0 | 1 | HEX.HD.SCR. ISO 4017-M6x12-A2-70 | .2 |
| 50 | 2176734-2 | 1 | REVOLUTION SENSOR | .2 |
| 51 | 2176729-0 | 1 | O-RING 17,17 x 1,78 | ..3 |
| 54 | 2177642-0 | 1 | TIMING BELT PULLEY CAMSHAFT | .2 |
| 56 | Z002011-0 | 1 | NUT & WASHER, CAMSHAFT PULLEY | .2 |
| 58 | 2178548-5 | 1 | IDLER PULLEY ASSY. | .2 |

114 MARINE
TURBO DIESEL
+SOLAS

# CAMSHAFT, HOUSING

01054084-0

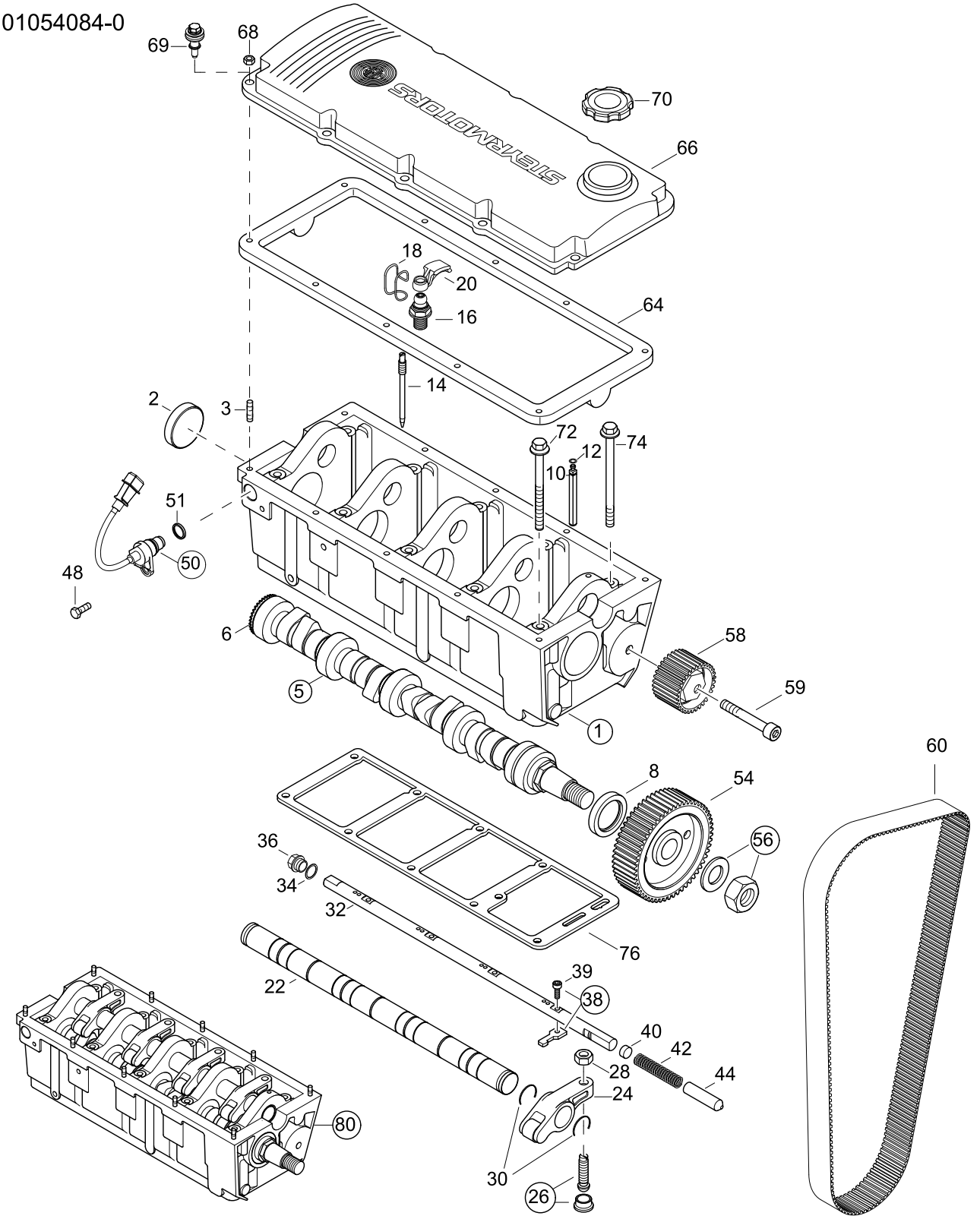

# CAMSHAFT, HOUSING

114 MARINE
TURBO DIESEL
+SOLAS

01054084-0

| Pos. | Part.-No. | Qty | Designation | Step |
|---|---|---|---|---|
| 59 | 3860155-0 | 1 | HEX.SOCK. HD.CAP SCR. DIN 912-M10x70-10.9-DAC A500 | .2 |
| 60 | 2178073-1 | 1 | TIMING BELT | .2 |
| 64 | 2040184-0 | 1 | VALVE-COVER GASKET | .2 |
| 66 | 2203725-9 | 1 | VALVE COVER, SILVER | .2 |
| 68 | 3880049-0 | 10 | HEX.FLANGE NUT DIN 6923-M6-A2-70 —>482300551 | .2 |
| 69 | 2040575-0 | 10 | SCREW, COVER ACOUSTIC DECOUPLED 482300552—> | .2 |
| 70 | 2203509-0 | 1 | FILLER CAP ENGINE OIL | .2 |
| 72 | 9000248-1 | 5 | HEX.FLANGE BOLT EN 1665-M8x110-10.9-A2C | .2 |
| 74 | 9000249-1 | 5 | HEX.FLANGE BOLT EN 1665-M8x130-10.9-A2C | .2 |
| 76 | 2203390-3 | 1 | SEAL CAMSHAFT HSG - CYL.BLOCK | .2 |
| 80 | Z002407-1 | 1 | PART. CAMSHAFT HSG POS. 1 - 44 (PAINTED) | .2 |

# OILPUMP, OILPIPE, OILPAN

01064084-0

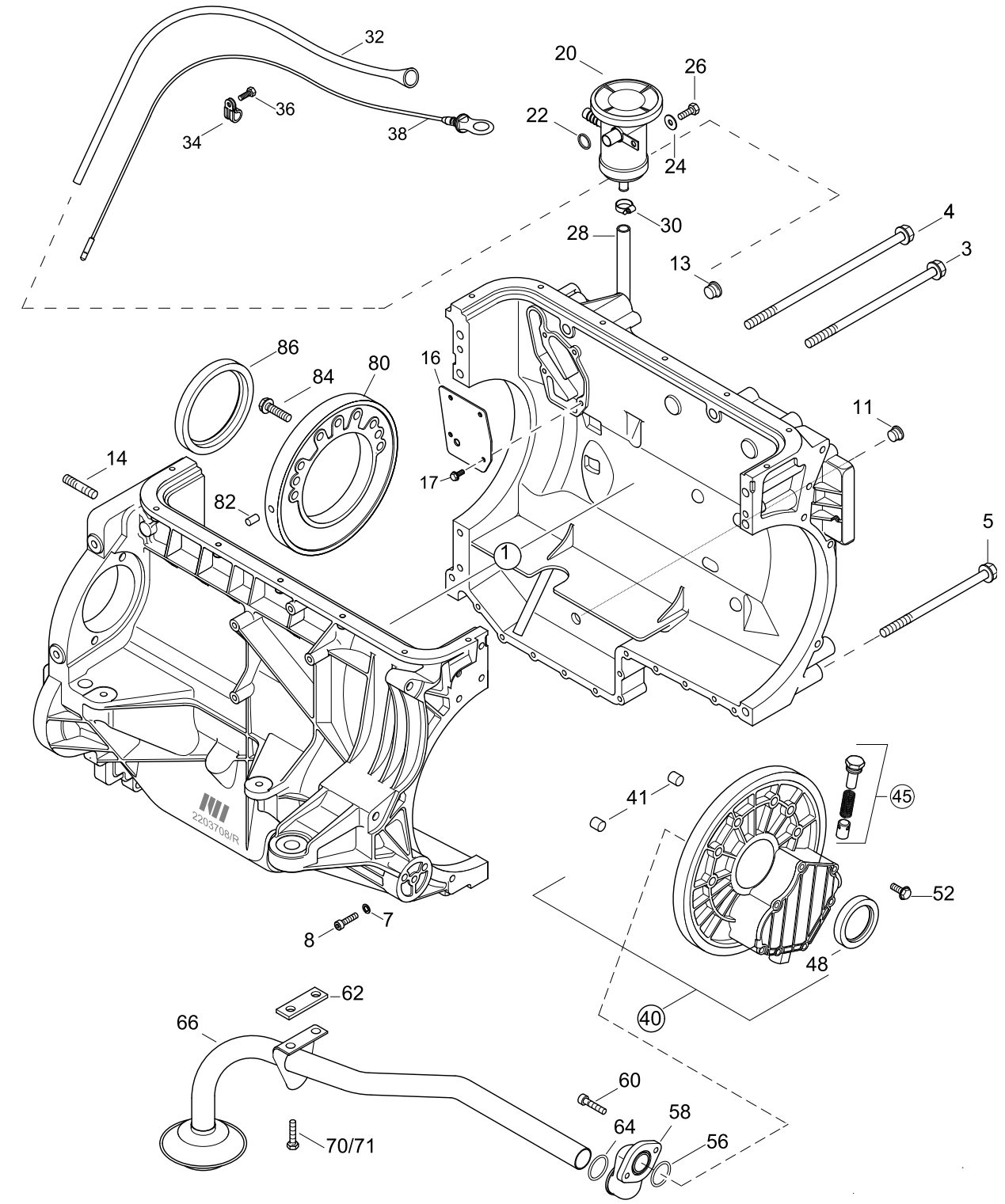

# OILPUMP, OILPIPE, OILPAN

114 MARINE
TURBO DIESEL
+SOLAS

01064084-0

| Pos. | Part.-No. | Qty | Designation | Step |
|---|---|---|---|---|
| 1 | Z002424-0 | 1 | ENGINE HSG ASSY. - PAINTED (INCL.PIPE OIL-DIPSTICK) | .2 |
| 3 | 9000464-0 | 2 | HEX.FLANGE BOLT EN 1665-M10x200-8.8-A3C | ..3 |
| 4 | 9000463-0 | 2 | HEX.FLANGE BOLT EN 1665-M10x250-8.8-A3C | ..3 |
| 5 | 9000392-0 | 3 | HEX.FLANGE BOLT EN 1665-M10x160-8.8-A3C | ..3 |
| 7 | 3932008-0 | 11 | SPRING WASHER DIN 137-B6-FST-A3C | ..3 |
| 8 | 3862352-0 | 11 | HEX.SOCK. HD.CAP SCR. DIN 912-M6x50-8.8-A2C | ..3 |
| 11 | 9000588-0 | 1 | HEX.SOCK.SCR.PLUG WITH RUBBER SEAL M16x1,5 | ..3 |
| 13 | 9000590-0 | 1 | HEX.SOCK.SCR.PLUG WITH RUBBER SEAL M22x1,5 | ..3 |
| 14 | 9000000-0 | 1 | STUD DIN 939-M8x25-A2-70 | ..3 |
| 16 | 2203738-0 | 1 | COVER PRE-OIL-SEPERATOR | ..3 |
| 17 | 9000287-0 | 4 | HEX.FLANGE BOLT EN 1665-M6x12-8.8 | ..3 |
| 20 | Z002051-0 | 1 | OIL SEPARATOR | .2 |
| 22 | 2178310-1 | 1 | O-RING 17 X 3,53 | .2 |
| 24 | 9000012-0 | 1 | WASHER LARGE SERIES DIN 9021-6.4-140HV-A2 | .2 |
| 26 | 3800221-0 | 1 | HEX.HD.SCR. ISO 4017-M6x20-A2-70 | .2 |
| 28 | 2178287-0 | 1 | HOSE, OIL DRAIN | .2 |
| 30 | 2174405-0 | 2 | HOSE CLAMP 10-16/7,5 | .2 |
| 32 | 2203757-0 | 1 | PIPE OIL-DIPSTICK | .2 |
| 34 | 2178566-0 | 1 | PIPE CLAMP DM15 | .2 |
| 36 | 3800233-0 | 1 | HEX.HD.SCR. ISO 4017-M6x16-A2-70 | .2 |
| 38 | 2203751-0 | 1 | OIL DIP STICK ASSY | .2 |
| 40 | Z002429-0 | 1 | OIL PUMP ASSY. (PAINTED) | .2 |
| 41 | 2170298-0 | 2 | FITTING SLEEVE DM12.5 (TO M10) | ..3 |
| 45 | Z002005-6 | 1 | RELIEF VALVE, OIL PUMP 4 CYL. | ..3 |
| 48 | 2170276-1 | 1 | ROTARY SHAFT SEAL CRANKS. FR. 55x70x8 | ..3 |
| 52 | 9000278-0 | 6 | HEX.FLANGE BOLT EN 1665-M8x35-8.8-A2C | .2 |
| 56 | 2040153-0 | 1 | O-RING 25.12x1.78 | .2 |
| 58 | 2040004-Z | 1 | OIL SUCTION MANIFOLD | .2 |
| 60 | 3862320-0 | 2 | HEX.SOCK. HD.CAP SCR. DIN 912-M6x20-8.8-A2C | .2 |
| 62 | 2203513-1 | 1 | SPACER, PIPE OIL SUCTION —>48223068 | .2 |
| 64 | 2173705-1 | 1 | O-RING 21,82 x 3,53 | .2 |

# OILPUMP, OILPIPE, OILPAN

01064084-0

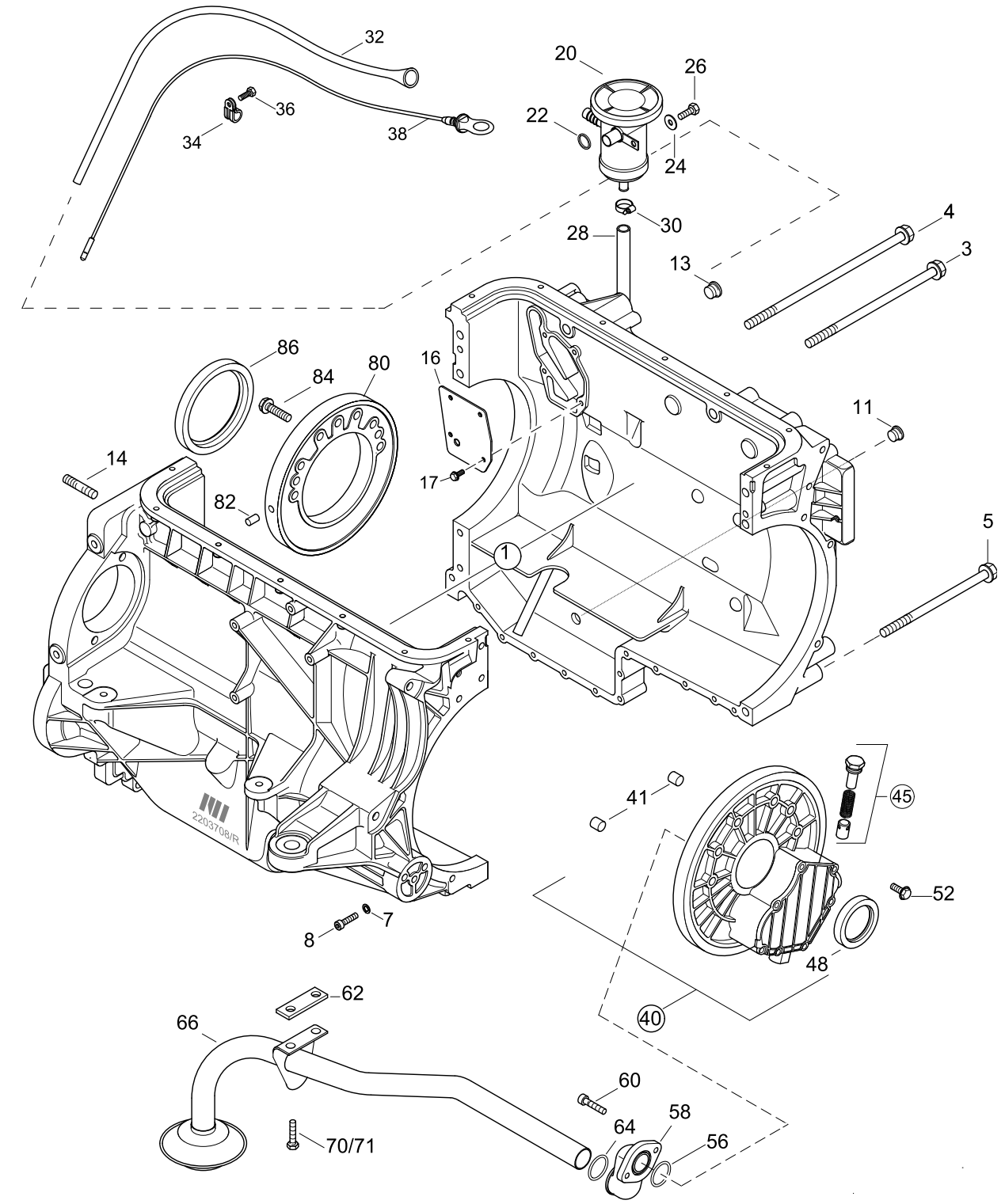

## OILPUMP, OILPIPE, OILPAN

114 MARINE
TURBO DIESEL
+SOLAS

01064084-0

| Pos. | Part.-No. | Qty | Designation | Step |
|---|---|---|---|---|
| 66 | 2203718-1 | 1 | PIPE OIL SUCTION | .2 |
| 70 | 3802321-0 | 2 | HEX.HD.SCR. ISO 4017-M6x16-8.8-A2C —>48223068 | .2 |
| 71 | 9000287-0 | 2 | HEX.FLANGE BOLT EN 1665-M6x12-8.8 48223069—> | .2 |
| 80 | 2172855-1 | 1 | RING CARRIER, REAR | .2 |
| 82 | 3901416-0 | 1 | PARALLEL PIN ISO 2338-8m6x16-ST | .2 |
| 84 | 9000278-0 | 7 | HEX.FLANGE BOLT EN 1665-M8x35-8.8-A2C | .2 |
| 86 | 2172289-1 | 1 | ROTARY SHAFT SEAL, CR.S. REAR | .2 |

114 MARINE
TURBO DIESEL
+SOLAS

# INTERCOOLER

01084084-0

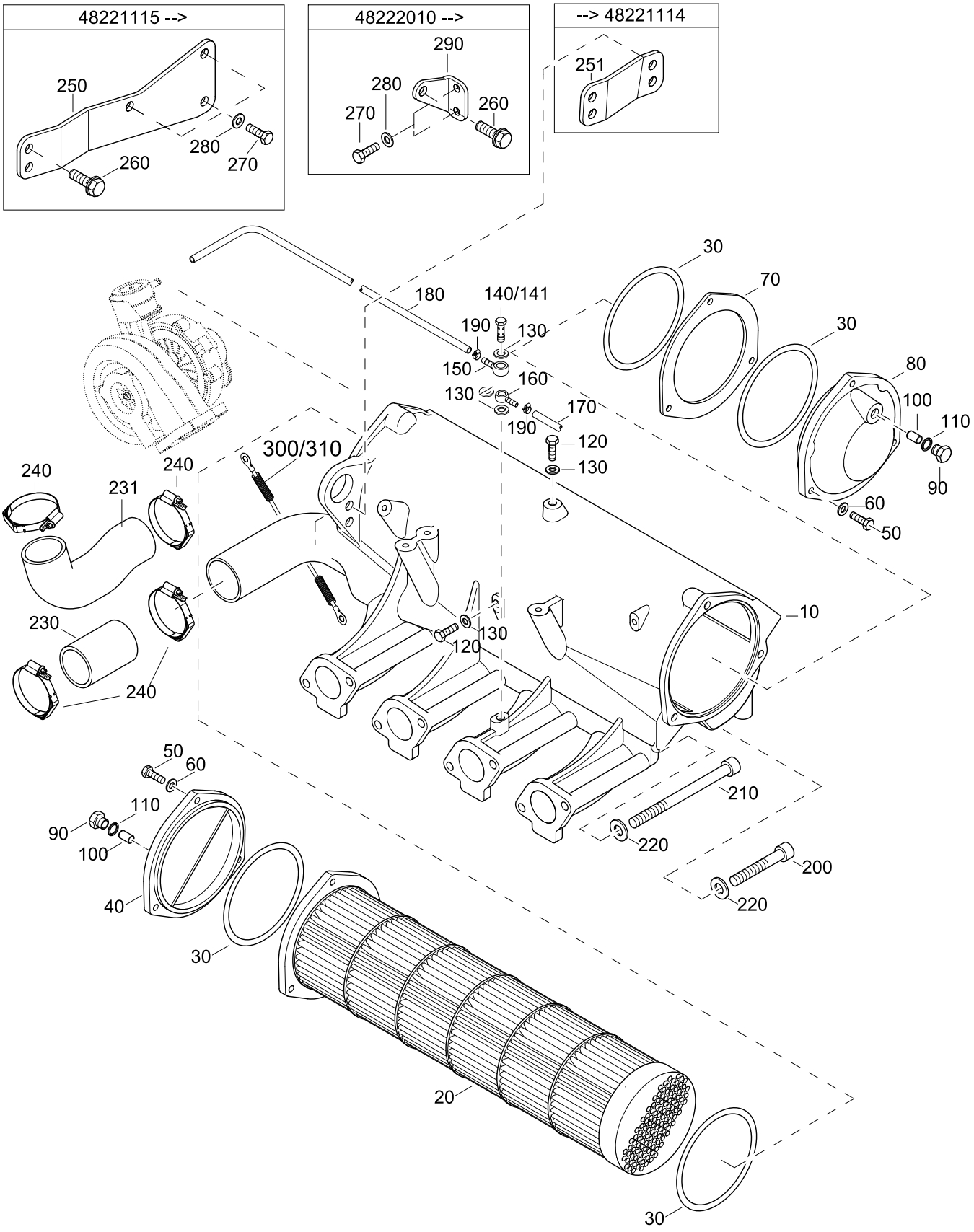

# INTERCOOLER

114 MARINE
TURBO DIESEL
+SOLAS

01084084-0

| Pos. | Part.-No. | Qty | Designation | Step |
|---|---|---|---|---|
| 10 | 2203706-9 | 1 | INTAKE MANIFOLD, PAINTED | .2 |
| 20 | 2177593-1 | 1 | INTERCOOLER | .2 |
| 30 | 2178483-0 | 4 | O-RING 120,24 x 3,53 | .2 |
| 40 | 2178415-8 | 1 | COVER INTERCOOLER REAR,PAINTED | .2 |
| 50 | 9000064-0 | 6 | HEX.SOCK. HD.CAP SCR. DIN 912-M8x35-8.8-A3C | .2 |
| 60 | 3930261-0 | 6 | WASHER DIN 125-A8.4-140HV-A3C | .2 |
| 70 | 2174270-0 | 1 | SPACER, INTERCOOLER | .2 |
| 80 | 2174261-9 | 1 | COVER INTERCOOLER FRONT, PAINTED | .2 |
| 90 | 2178412-1 | 2 | PLUG M18x1.5 | .2 |
| 100 | 2178413-1 | 2 | ZINC ANODE | .2 |
| 110 | 3098020-0 | 2 | SEALING RING DIN 7603-A18x22-CU | .2 |
| 120 | 3802411-0 | 2 | HEX.HD.SCR. ISO 4017-M8x16 A4-70 | .2 |
| 130 | 3098009-0 | 4 | SEALING RING DIN 7603-A8x14-CU | .2 |
| 140 | 2203794-0 | 1 | DUO HOLLOW SCREW M8x1 | .2 |
| 141 | 11869 | 1 | HOLLOW SCREW M8x1 (ONLY FOR MO144M38) | .2 |
| 150 | 2203795-0 | 1 | BANJO 8-4 | .2 |
| 160 | 2203796-0 | 1 | BANJO NUT DM8 | .2 |
| 170 | 2203665-1 | 1 | HOSE | .2 |
| 180 | 2178552-2 | 1 | HOSE | .2 |
| 190 | 2178893-0 | 2 | HOSE CLAMP 8-12/7,5 | .2 |
| 200 | 3862447-0 | 4 | HEX.SOCK. HD.CAP SCR. DIN 912-M8x45-8.8-A2C | .2 |
| 210 | 9000312-0 | 4 | HEX.SOCK. HD.CAP SCR. DIN 912-M8x120-8.8-A2C | .2 |
| 220 | 3930261-0 | 8 | WASHER DIN 125-A8.4-140HV-A3C | .2 |
| 230 | 2203773-0 | 1 | HOSE, TURBO CHARGER | .2 |
| 231 | 2203830-0 | 1 | CHARGE AIR HOSE (ONLY FOR MO144M38) | .2 |
| 240 | 2179050-0 | 2 | HOSE CLAMP WITH SPRING 40-60/9 | .2 |
| 250 | 2203789-1 | 1 | SHACKLE 48221115—> | .2 |
| 251 | 2203789-0 | 1 | SHACKLE —>48221114 | .2 |
| 260 | 9000271-0 | 3 | HEX.FLANGE BOLT EN 1665-M8x25-10.9 | .2 |
| 270 | 3800233-0 | 5 | HEX.HD.SCR. ISO 4017-M6x16-A2-70 | .2 |
| 280 | 3930070-0 | 5 | WASHER DIN 125-6-140HV-A2 | .2 |

114 MARINE
TURBO DIESEL
+SOLAS

# INTERCOOLER

01084084-0

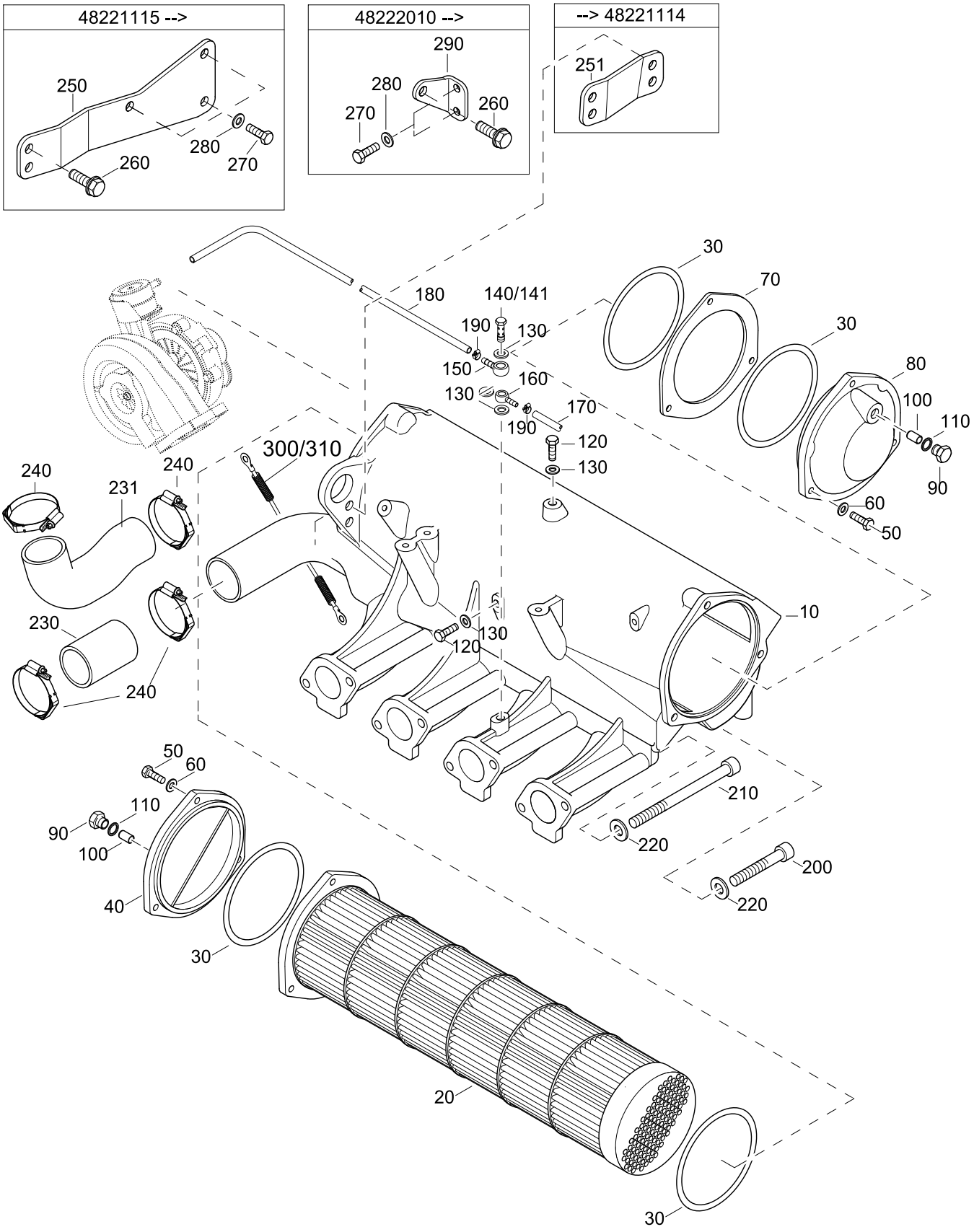

# INTERCOOLER

114 MARINE
TURBO DIESEL
+SOLAS

01084084-0

| Pos. | Part.-No. | Qty | Designation | Step |
|---|---|---|---|---|
| 290 | 2203789-2 | 1 | SHACKLE 48222010—> | .2 |
| 300 | 2206210-1 | 1 | GROUND WIRE ASSY. —>482290263 | .2 |
| 310 | 2178968-0 | 1 | GROUND WIRE ASSY. 482290264—> | .2 |

STEYRMOTORS
INNOVATION WITH LIGHTNESS

114 MARINE
TURBO DIESEL
+SOLAS

# POWER TAKE OFF FRONT

01094084-0

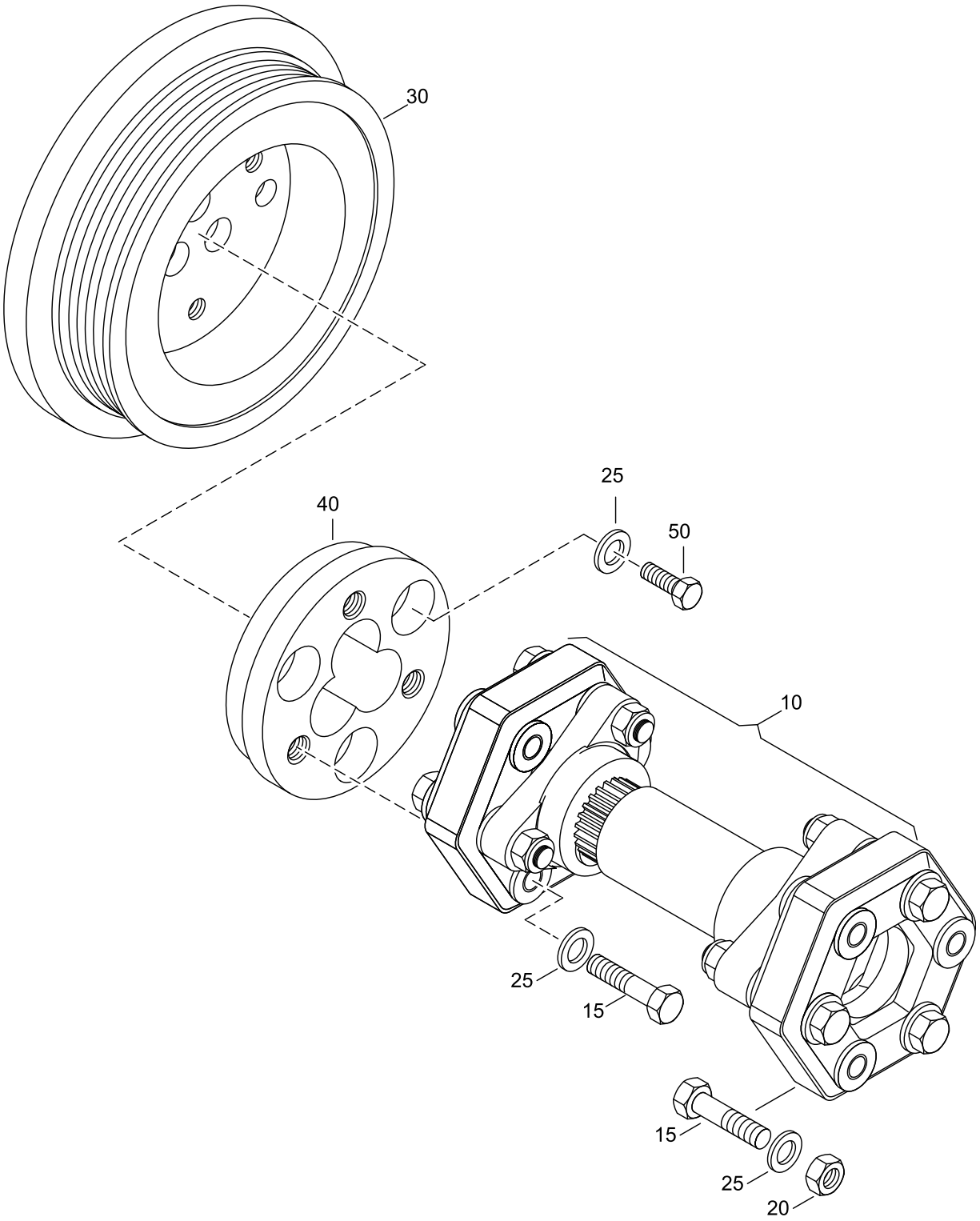

# POWER TAKE OFF FRONT

114 MARINE
TURBO DIESEL
+SOLAS

01094084-0

| Pos. | Part.-No. | Qty | Designation | Step |
|---|---|---|---|---|
| 10 | 2205329-0 | 1 | ELASTIC SHAFT L=130-158 | .2 |
| 15 | 3802451-0 | 6 | HEX.HD.SCR. ISO 4017-M8x50-8.8-A2C | .2 |
| 20 | 3888722-0 | 3 | HEX.NUT,PREVG.TORQUE DIN 985-M8-A2C | .2 |
| 25 | 3930103-0 | 9 | WASHER DIN 125-8.4-140HV-A2 | .2 |
| 30 | 2203779-0 | 1 | TORSIONAL VIBRATION DAMPER-PTO | .2 |
| 40 | 2203787-0 | 1 | FLANGE - PTO | .2 |
| 50 | 3802432-0 | 3 | HEX.HD.SCR. ISO 4017-M8x30-8.8-A2C | .2 |

114 MARINE
TURBO DIESEL
+SOLAS

# OILCOOLER

01134084-0

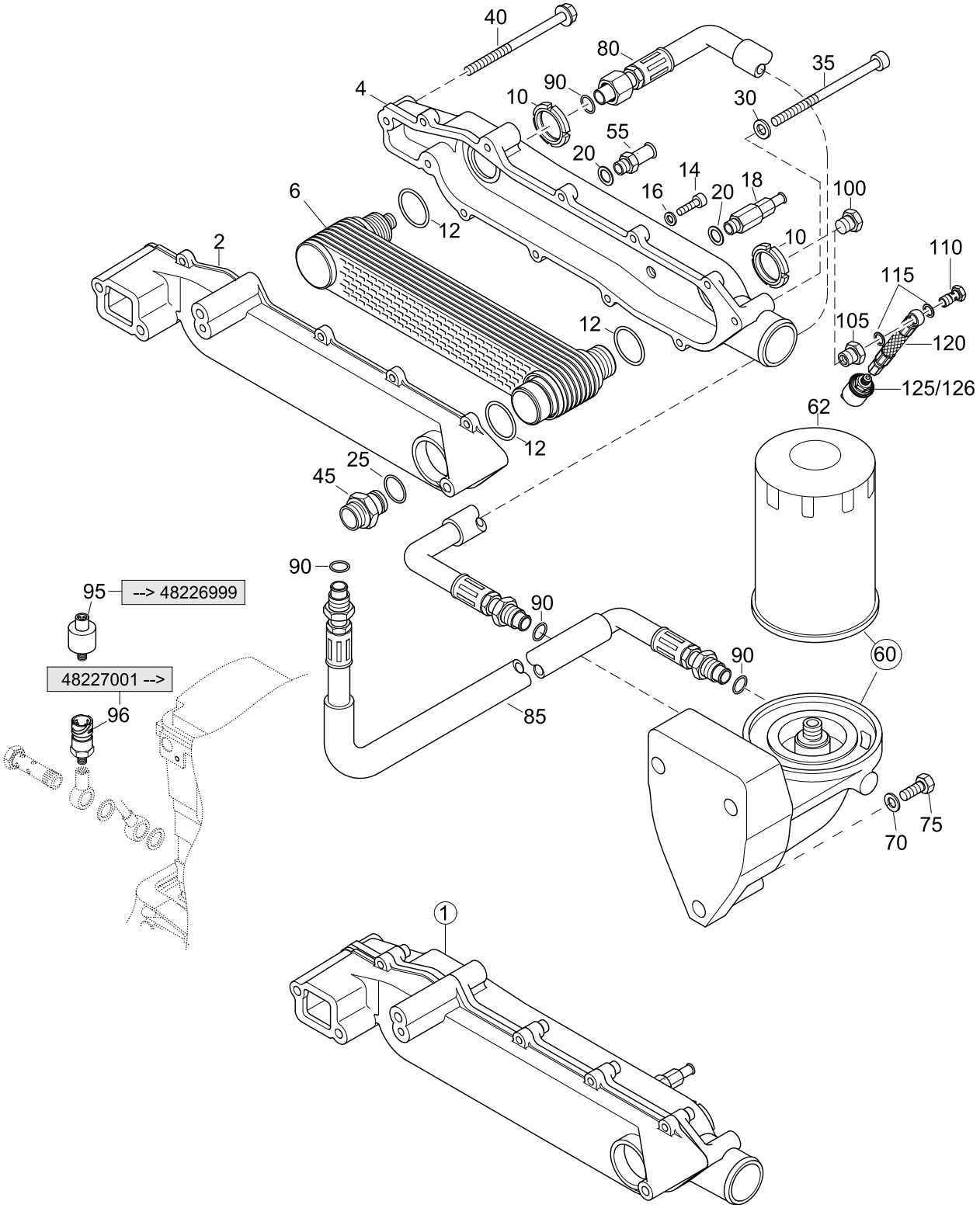

# OILCOOLER

114 MARINE
TURBO DIESEL
+SOLAS

01134084-0

| Pos. | Part.-No. | Qty | Designation | Step |
|---|---|---|---|---|
| 1 | Z002402-0 | 1 | OIL COOLER ASSY. 4 CYL. MARINE (PAINTED) | .2 |
| 2 | 2203260-9 | 1 | HOUSING OIL COOLER, PAINTED | ..3 |
| 4 | 2203262-9 | 1 | COVER OIL COOLER, PAINTED | ..3 |
| 6 | 2178632-1 | 1 | OIL COOLER CARTRIDGE | ..3 |
| 10 | 9000315-0 | 2 | GROOVE NUT DIN 70852-M30x1.5-14H-A3C | ..3 |
| 12 | 2177741-0 | 3 | O-RING 32,92 x 3,53 | ..3 |
| 14 | 3862327-0 | 7 | HEX.SOCK. HD.CAP SCR. DIN 912-M6x25-8.8-A2C | ..3 |
| 16 | 3932008-0 | 7 | SPRING WASHER DIN 137-B6-FST-A3C | ..3 |
| 18 | 2178598-0 | 1 | DRAIN COCK ASSY. | ..3 |
| 20 | 9000786-0 | 1 | DICHTRING DIN 7603-A12x16-CU | ..3 |
| 25 | 2177742-1 | 1 | O-RING 25 x 3,53 | .2 |
| 30 | 3930103-0 | 2 | WASHER DIN 125-8.4-140HV-A2 | .2 |
| 35 | 9000312-0 | 2 | HEX.SOCK. HD.CAP SCR. DIN 912-M8x120-8.8-A2C | .2 |
| 40 | 9000248-1 | 3 | HEX.FLANGE BOLT EN 1665-M8x110-10.9-A2C | .2 |
| 45 | Z002127-0 | 1 | SPARE P. BUSHING, OIL COOLER | .2 |
| 55 | 2178698-0 | 1 | NIPPLE HEATER ON OILCOOLER (ACCESSORY) | .2 |
| 60 | Z002403-0 | 1 | OIL FILTER & COVER ASSY. PAINTED | .2 |
| 62 | 2178582-1 | 1 | OIL FILTER CARTRIDGE | ..3 |
| 70 | 3930103-0 | 3 | WASHER DIN 125-8.4-140HV-A2 | .2 |
| 75 | 3862452-0 | 3 | HEX.SOCK. HD.CAP SCR. DIN 912-M8x50-8.8-A2C | .2 |
| 80 | 2203740-0 | 1 | HOSE, FILTER-OIL COOLER | .2 |
| 85 | 2203741-0 | 1 | HOSE, OILPUMP TO FILTER | .2 |
| 90 | 2176170-0 | 4 | O-RING 15 x 2 | .2 |
| 95 | 2206122-0 | 1 | OIL PRESSURE SENSOR —>48226999 | .2 |
| 96 | 2206305-0 | 1 | PRESSURE SENSOR 1/8-27 NPT 48227001—> | .2 |
| 100 | 9000290-0 | 1 | SCREW PLUG 1/4-18 NPTF | .2 |
| 105 | 2203819-0 | 1 | SCREW PLUG 1/4-18 NPTF - M10x1 | .2 |
| 110 | 9000010-1 | 1 | HOLLOW SCREW M10x1 | .2 |
| 115 | 3098011-0 | 2 | SEALING RING DIN 7603-A10x16-CU | .2 |
| 120 | Z002405-0 | 1 | HOSE OIL PRESSURE SENSOR (ACCESSORY) | .2 |
| 125 | Z002640-0 | 1 | OIL PRESSURE SENSOR 2 WAY (ACCESSORY) | .2 |

114 MARINE
TURBO DIESEL
+SOLAS

# OILCOOLER

01134084-0

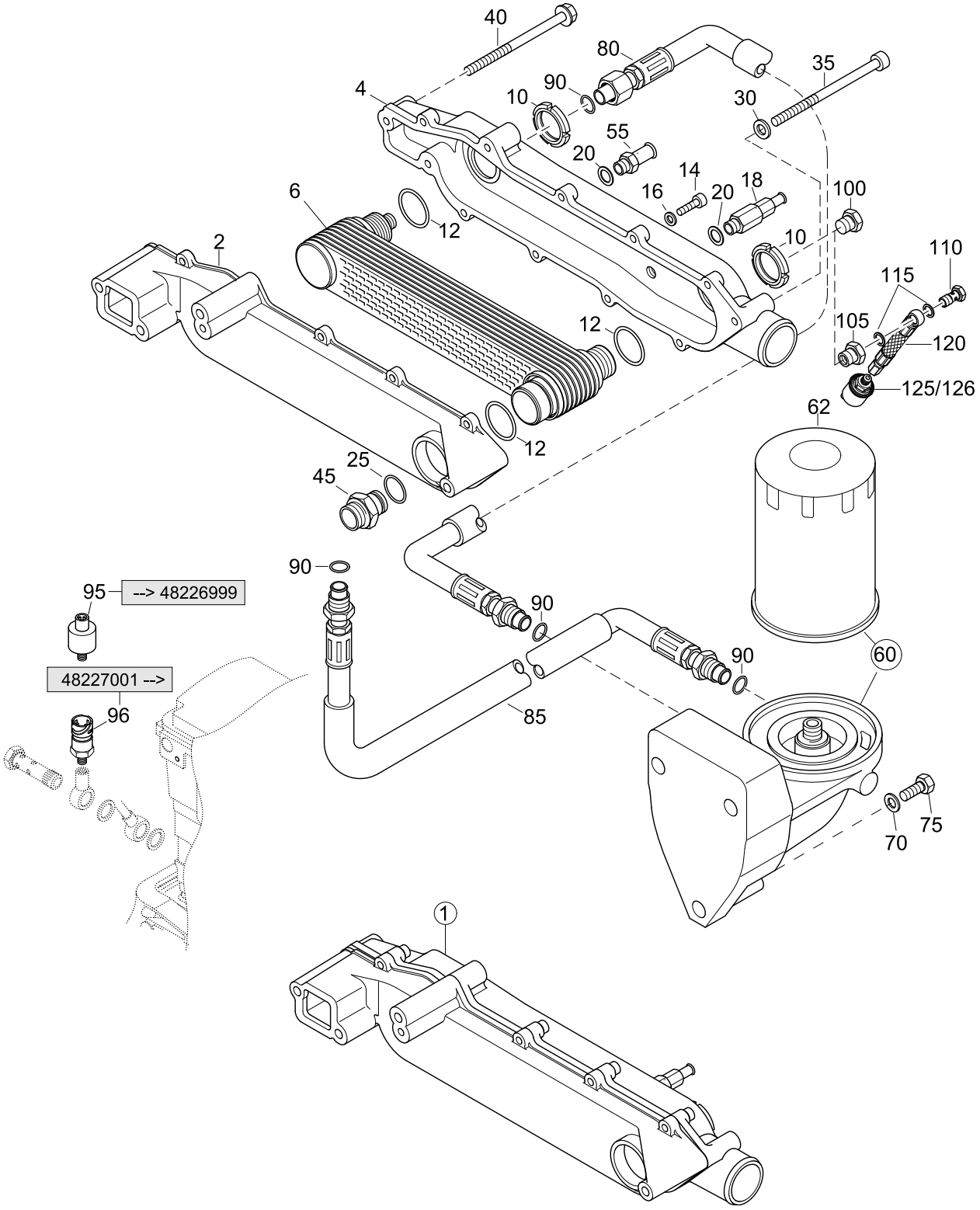

# OILCOOLER

114 MARINE
TURBO DIESEL
+SOLAS

01134084-0

| Pos. | Part.-No. | Qty | Designation | Step |
|---|---|---|---|---|
| 126 | Z002641-0 | 1 | OIL PRESSURE SENSOR 2 WAY TWIN INSTR.PANEL (ACC) | .2 |

# EXHAUST, HEAT EXCHANGER, GASKET

01144084-0

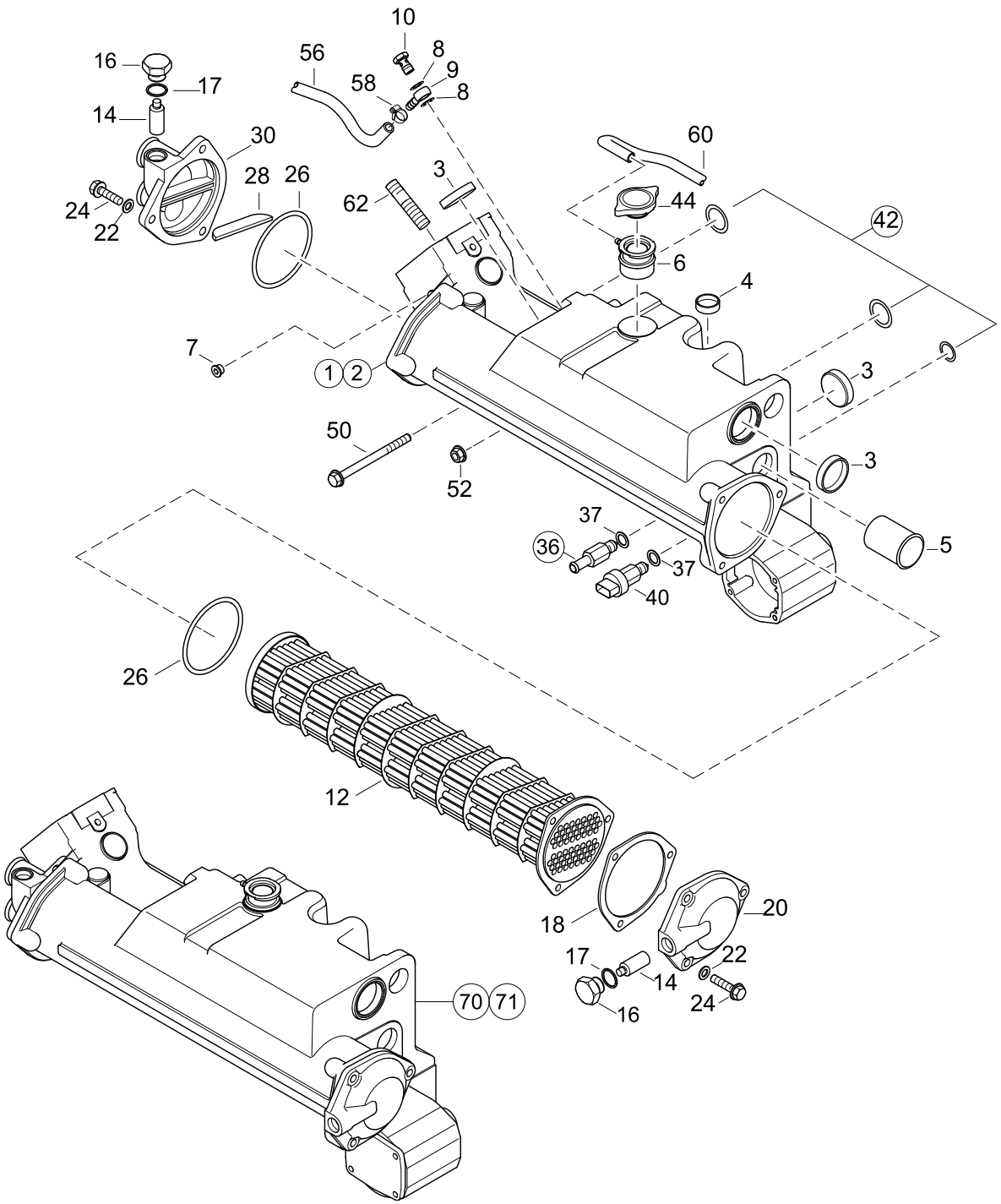

# EXHAUST, HEAT EXCHANGER, GASKET

114 MARINE
TURBO DIESEL
+SOLAS

01144084-0

| Pos. | Part.-No. | Qty | Designation | Step |
|---|---|---|---|---|
| 1 | 2203703-0 | 1 | EXHAUST MANIFOLD ASSY. PAINTED —>48227163 | .2 |
| 2 | Z002433-0 | 1 | EXHAUST MANIFOLD ASSY. PAINTED 48227164—> | .2 |
| 3 | 2178112-0 | 3 | CORE HOLE PLUG 40/8 | ..3 |
| 4 | Z002048-0 | 9 | CORE PLUG WITH O-RING | ..3 |
| 5 | 2174617-0 | 1 | PIPE FITTING | ..3 |
| 6 | 2178331-0 | 1 | FILLER NECK | ..3 |
| 7 | 2170217-0 | 1 | SCREW PLUG M10x1 | ..3 |
| 8 | 3098011-0 | 4 | SEALING RING DIN 7603-A10x16-CU | .2 |
| 9 | 2174384-1 | 2 | BANJO DN6 DIN 7642 | .2 |
| 10 | 9000010-1 | 2 | HOLLOW SCREW M10x1 DIN 7643-6-3-S | .2 |
| 12 | 2203704-0 | 1 | HEATEXCHANGER | .2 |
| 14 | 2178413-1 | 2 | ZINC ANODE | .2 |
| 16 | Z002017-0 | 2 | PLUG & SEAL FOR ZINC-ANODE | .2 |
| 17 | 3098020-0 | 1 | SEALING RING DIN 7603-A18x22-CU | ..3 |
| 18 | 2174155-1 | 1 | GASKET, HEAT EXCHANGER COVER | .2 |
| 20 | 2173510-9 | 1 | COVER HEAT EXCHANGER, FRONT PAINTED | .2 |
| 24 | 9000431-0 | 6 | HEX.FLANGE BOLT EN 1665-M8x30-10.9-DAC | .2 |
| 26 | 2173636-0 | 2 | O-RING 90x3 | .2 |
| 28 | 2174073-0 | 1 | SEAL FOR HEAT EXCHANGER COVER | .2 |
| 30 | 2177450-9 | 1 | COVER HEAT EXCHANGER REAR, PAINTED | .2 |
| 36 | 2178598-0 | 1 | DRAIN COCK ASSY. | .2 |
| 37 | 3098013-0 | 2 | SEALING RING DIN 7603-A12x18-CU | .2 |
| 40 | 2174623-3 | 1 | COOLANT TEMPERATURE SENSOR | .2 |
| 42 | Z002489-0 | 1 | SEAL KIT, EXH.MANIF - BLOCK 4 CYL.MARINE (O-RINGS) | .2 |
| 44 | 2174693-7 | 1 | FILLER CAP ENGINE COOLANT | .2 |
| 50 | 9000248-1 | 8 | HEX.FLANGE BOLT EN 1665-M8x110-10.9-A2C | .2 |
| 52 | 3880049-0 | 2 | HEX.FLANGE NUT DIN 6923-M6-A2-70 | .2 |
| 56 | 2178552-1 | 1 | HOSE L=275mm | .2 |
| 58 | 2174405-0 | 2 | HOSE CLAMP 10-16/7,5 EN 10088-1 | .2 |
| 60 | 2174682-0 | 1 | HOSE, OVERFLOW | .2 |
| 62 | 2203778-0 | 4 | STUD HEAT-RESISTANT STEEL DIN 940-M8FOx25 | .2 |

# EXHAUST, HEAT EXCHANGER, GASKET

01144084-0

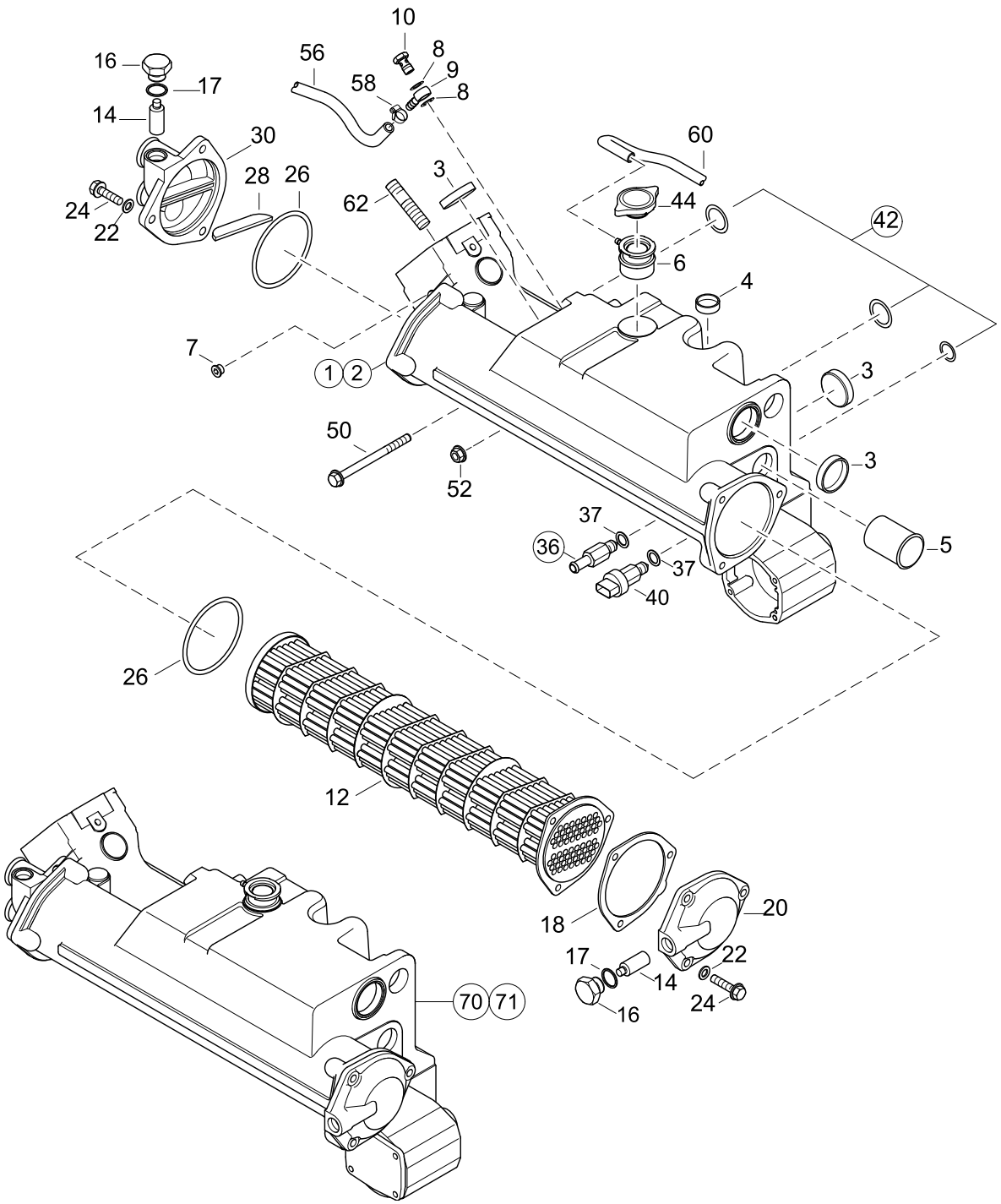

# EXHAUST, HEAT EXCHANGER, GASKET

114 MARINE
TURBO DIESEL
+SOLAS

01144084-0

| Pos. | Part.-No. | Qty | Designation | Step |
|---|---|---|---|---|
| 70 | Z002408-0 | 1 | EXH. MANIFOLD COMPLETE (PAINTED) —>48227163 | .2 |
| 71 | Z002408-1 | 1 | EXH. MANIFOLD COMPLETE (PAINTED) 48227164—> | .2 |

114 MARINE TURBO DIESEL +SOLAS

# COUPLER

02014084-1

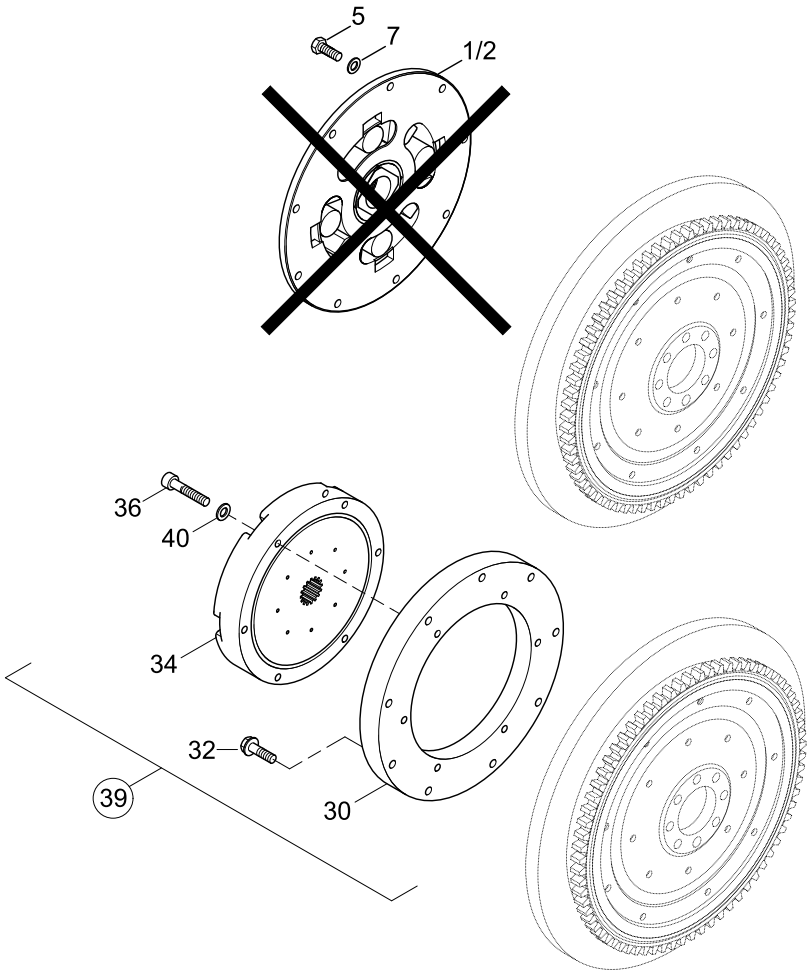

# COUPLER

114 MARINE
TURBO DIESEL
+SOLAS

02014084-1

| Pos. | Part.-No. | Qty | Designation | Step |
|---|---|---|---|---|
| 1 | 2178860-X | 1 | COUPLING 20/40-26T (ZF) —> NEW NUMBER Z002066-V | .2 |
| 2 | 2178860-Y | 1 | COUPLING 16/32-17T (NEWAGE) —> NEW NUMBER Z002066-J | .2 |
| 5 | 3802424-0 | 9 | HEX.HD.SCR. ISO 4017-M8x25-8.8-A2C | .2 |
| 7 | 3930103-0 | 9 | WASHER DIN 125-8.4-140HV-A2 | .2 |
| 30 | 2179163-0 | 1 | ADAPTER RING, FLY WHEEL | .2 |
| 32 | 9000431-0 | 9 | HEX.FLANGE BOLT EN 1665-M8x30-10.9-DAC | .2 |
| 34 | 2179164-0 | 1 | COUPLER 20-40 26T | .2 |
| 36 | 9000520-0 | 6 | HEX.SOCK. HD.CAP SCR. ISO 4762-M8x50-10.9-DAC | .2 |
| 39 | Z002066-V | 1 | COUPLING KIT 20/40-26T F.GEAR & SCREWS | .2 |
| 40 | 3930103-0 | 6 | WASHER DIN 125-8.4-140HV-A2 | .2 |

114 MARINE
TURBO DIESEL
+SOLAS

# FUEL PUMP, UNIT INJECTOR, PIPE

03024084-1

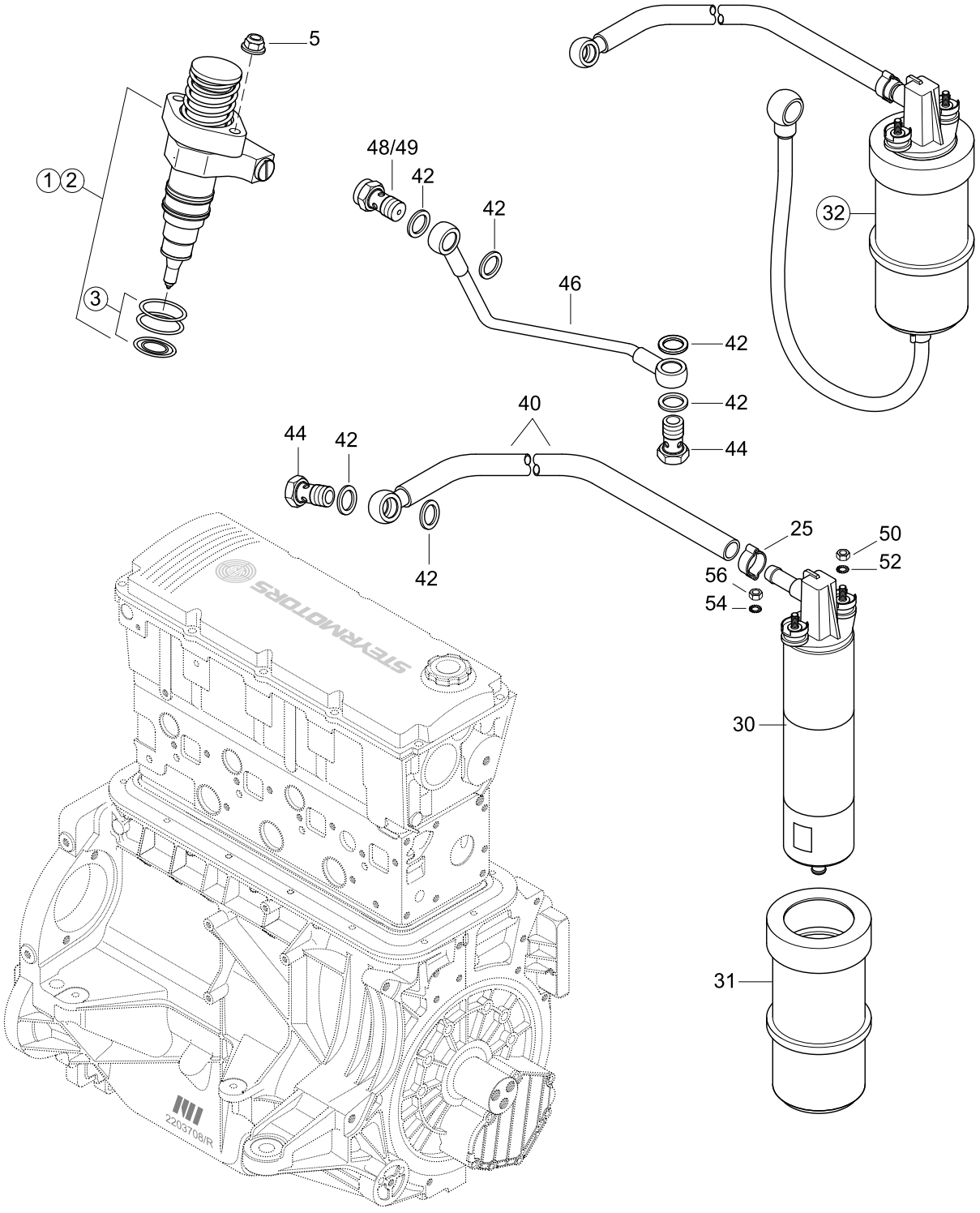

# FUEL PUMP, UNIT INJECTOR, PIPE

114 MARINE
TURBO DIESEL
+SOLAS

03024084-1

| Pos. | Part.-No. | Qty | Designation | Step |
|---|---|---|---|---|
| 1 | Z002030-5 | 4 | UNIT INJECTOR ASSY 555/5 & SEAL RING —>48226999 | .2 |
| 2 | Z002030-7 | 4 | UNIT INJECTOR + SEALINGS 2176557/0 48227001—> | .2 |
| 3 | Z002031-0 | 1 | SEAL KIT, UNIT INJECTOR | ..3 |
| 5 | 9000056-1 | 8 | HEX.FLANGE NUT DIN 6923-M8-8-A2C | .2 |
| 25 | 2178995-0 | 1 | HOSE CLAMP 17,5mm | .2 |
| 30 | 2173396-4 | 1 | FUEL PUMP 12V (WITH ISOLATING SLEEVE) | .2 |
| 31 | 2173396-I | 1 | ISOLATING SLEEVE FUEL PUMP | ..3 |
| 32 | Z002054-1 | 1 | FUEL PUMP ASSY & LINES | .2 |
| 40 | 2203766-1 | 1 | FUEL HOSE PUMP/BLOCK | .2 |
| 42 | 3098015-0 | 6 | SEALING RING DIN 7603-A14x20-CU | .2 |
| 44 | 9000053-0 | 2 | HOLLOW SCREW M14x1,5 DIN 7643-10-DAC A500 | .2 |
| 46 | 2203776-0 | 1 | FUEL PIPE BLOCK-TANDEMCOOLER (KTL) | .2 |
| 48 | 2178561-1 | 1 | OVERFLOW VALVE FUEL-CYLINDER BLOCK —>48224082 | .2 |
| 49 | 2178572-1 | 1 | HOLLOW SCREW THROTTLED 48224083—> | .2 |
| 50 | 3870050-0 | 1 | HEX.NUT DIN 934-M5-A2-70 | .2 |
| 52 | 9000040-0 | 1 | TOOTHED LOCK WASHER EXTERN. DIN 6797-A5.3-1.4310 | .2 |
| 54 | 9000039-0 | 1 | TOOTHED LOCK WASHER EXTERN. DIN 6797-A4.3-1.4310 | .2 |
| 56 | 3870051-0 | 1 | HEX.NUT ISO 4032-M4-A2-70 | .2 |

114 MARINE TURBO DIESEL +SOLAS

# AIRFILTER

03044034-0

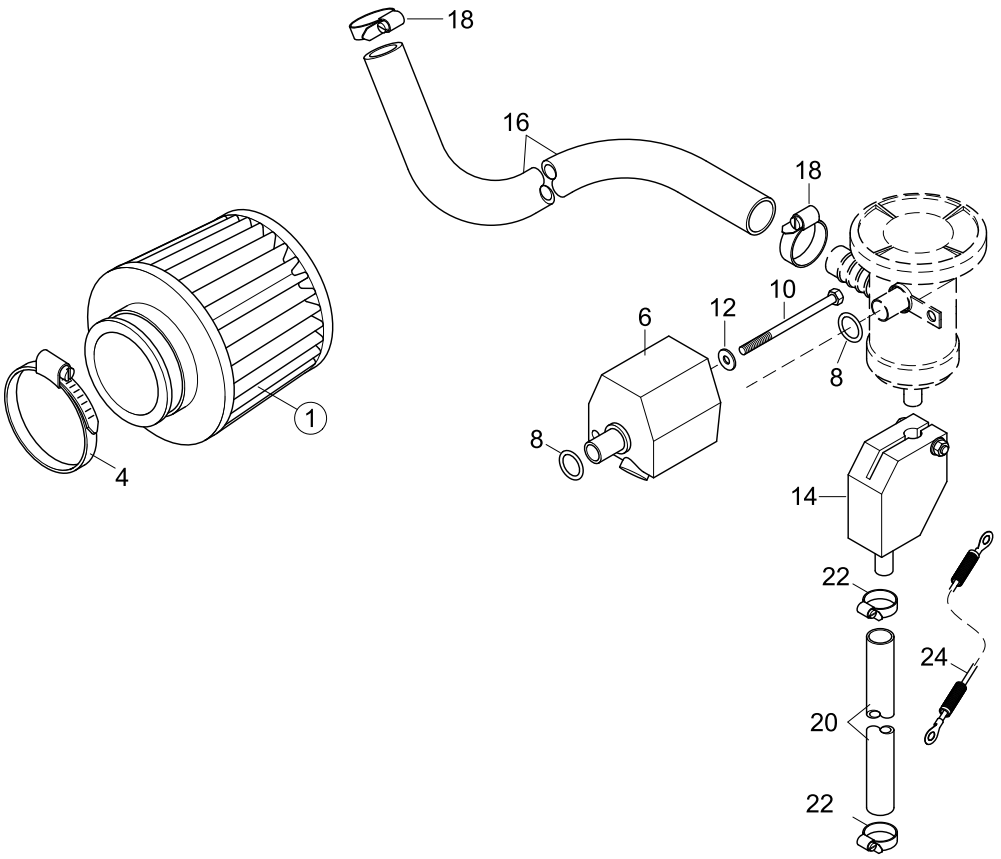

# AIRFILTER

114 MARINE
TURBO DIESEL
+SOLAS

03044034-0

| Pos. | Part.-No. | Qty | Designation | Step |
|---|---|---|---|---|
| 1 | Z002100-0 | 1 | AIR FILTER DM70 + HOSE CLAMP | .2 |
| 4 | 2174417-1 | 1 | HOSE CLAMP 70-90/9 | ..3 |
| 6 | 2179069-9 | 1 | BALL VALVE ASSY. (PAINTED) | .2 |
| 8 | 2178310-1 | 2 | O-RING 17 X 3,53 | .2 |
| 10 | 9000452-0 | 1 | HEX.HD.BOLT ISO 4014-M6x75-A2-70 | .2 |
| 12 | 9000012-0 | 1 | WASHER LARGE SERIES DIN 9021-6.4-140HV-A2 | .2 |
| 14 | 2179070-9 | 1 | BALL VALVE ASSY. (PAINTED) | .2 |
| 16 | 2178581-2 | 1 | HOSE OIL SEPERATOR | .2 |
| 18 | 2177753-0 | 2 | HOSE CLAMP 16-25/9 | .2 |
| 20 | 2178287-1 | 1 | HOSE, OIL DRAIN | .2 |
| 22 | 2174405-0 | 2 | HOSE CLAMP 10-16/7,5 | .2 |
| 24 | 2206210-1 | 1 | GROUND WIRE ASSY. | .2 |

114 MARINE
TURBO DIESEL
+SOLAS

# TURBOCHARGER

03054034-0

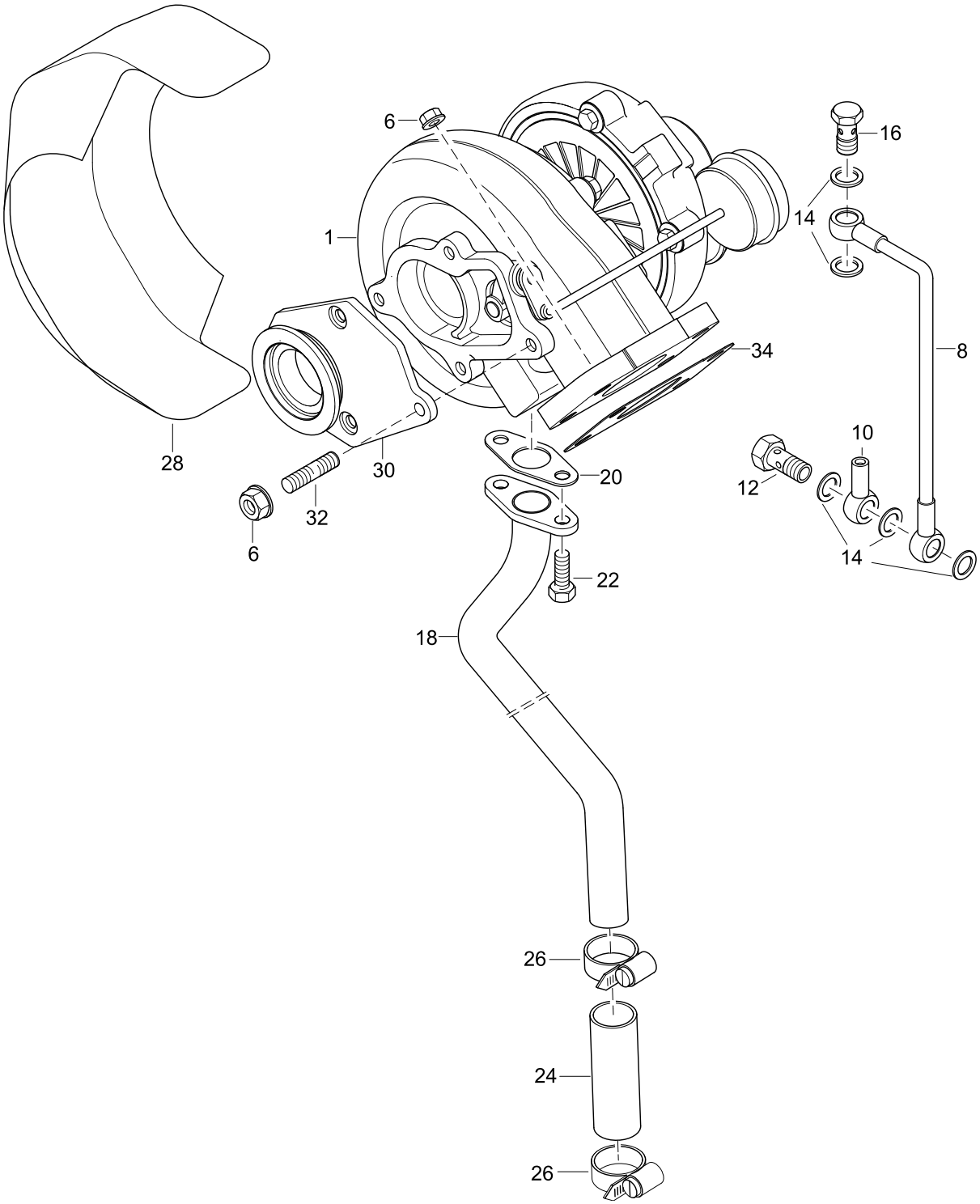

# TURBOCHARGER

114 MARINE
TURBO DIESEL
+SOLAS

03054034-0

| Pos. | Part.-No. | Qty | Designation | Step |
|---|---|---|---|---|
| 1 | Z002432-0 | 1 | TURBO & BASE AIR FILTER ASSY. (PAINTED) | .2 |
| 6 | 2178640-0 | 9 | HEX.FL. NUT, PREVG.TORQUE HEAT RESIST. EN 1664-M8-C2U-GA | .2 |
| 8 | 2203770-2 | 1 | OIL INLET PIPE TURBOCHARGER | .2 |
| 10 | 2203772-0 | 1 | BRACKET OIL PRESSURE SENSOR | .2 |
| 12 | 2203591-0 | 1 | DOUBLE HOLLOW SCREW M12x1,5 DIN 7643-8 | .2 |
| 14 | 3098013-0 | 5 | SEALING RING DIN 7603-A12x18-CU | .2 |
| 16 | 11868 | 1 | HOLLOW SCREW M12x1,5 DIN 7643-8-3-A3C | .2 |
| 18 | 2203760-0 | 1 | PIPE OIL-RETURN ASSY. | .2 |
| 20 | 2203278-0 | 1 | GASKET OIL-RETURN TURBOCHARGER | .2 |
| 22 | 3800233-0 | 2 | HEX.HD.SCR. ISO 4017-M6x16-A2-70 | .2 |
| 24 | 2178573-4 | 1 | HOSE OIL-RETURN TURBOCHARGER | .2 |
| 26 | 2177753-0 | 2 | HOSE CLAMP 16-25/9 EN 10088-1 | .2 |
| 28 | 2203749-2 | 1 | HEAT PROTECTING TURBO MARINE 4 CYL. | .2 |
| 30 | 2203833-1 | 1 | FLANGE EXHAUST TURBO | .2 |
| 32 | 2178608-2 | 5 | STUD HIGH TEMPERATURE RESISTANT DIN 939-M8x18 | .2 |
| 34 | 2200309-1 | 1 | GASKET TURBO CHARGER | .2 |

# CONTR. SOLENOID, POTENTIOMETER

03084084-1

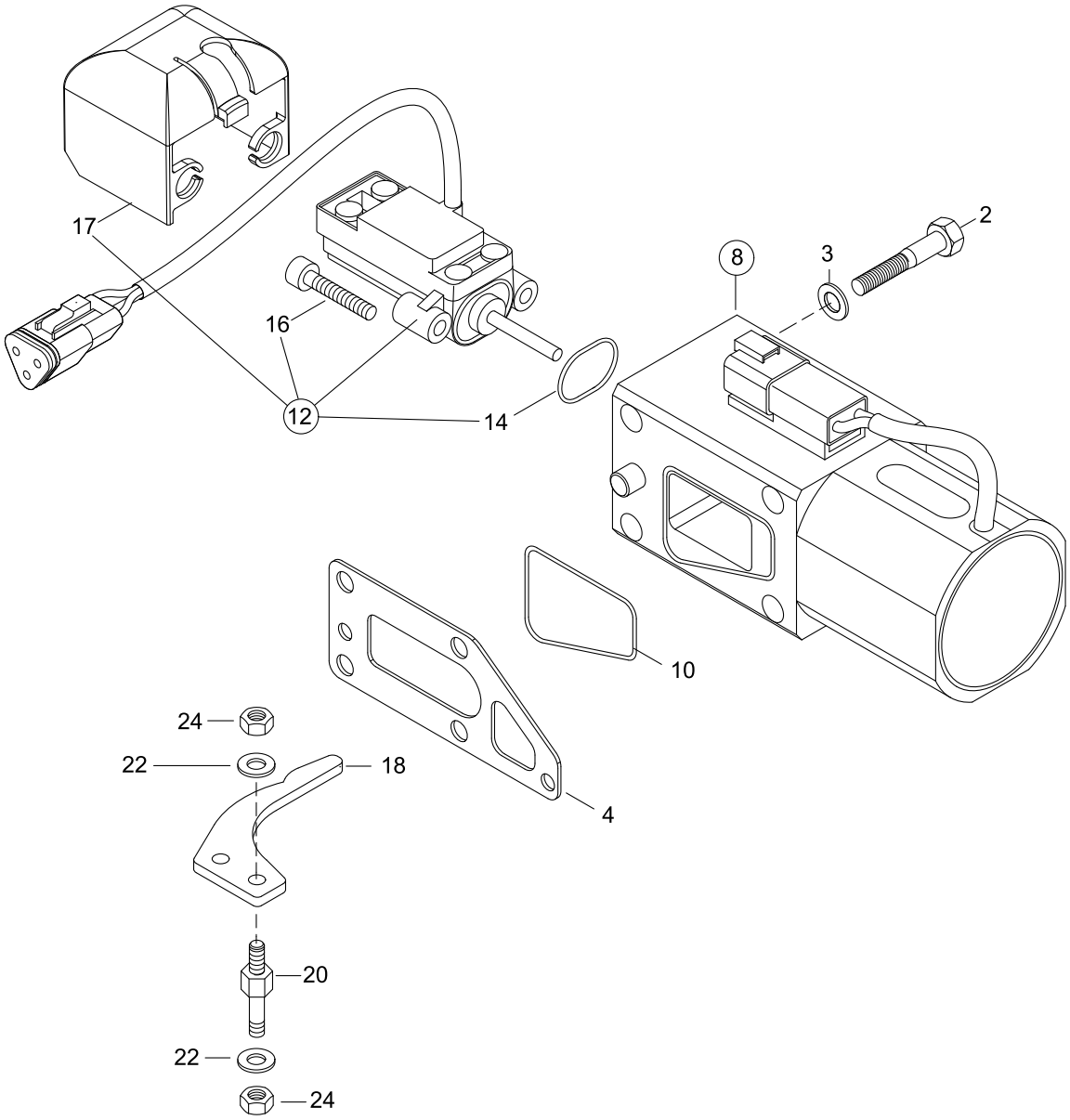

## CONTR. SOLENOID, POTENTIOMETER

114 MARINE
TURBO DIESEL
+SOLAS

03084084-1

| Pos. | Part.-No. | Qty | Designation | Step |
|---|---|---|---|---|
| 2 | 9000446-1 | 4 | HEX.HD.BOLT ISO 4014-M8x70-A4-70 | .2 |
| 3 | 3930103-0 | 4 | WASHER DIN 125-8.4-140HV-A2 | .2 |
| 4 | 2205223-0 | 1 | SEAL, SOLENOID (TILL 2006) | .2 |
| 8 | Z002153-0 | 1 | CONTROL SOLENOID W. SENSOR CONTROL RACK POSITION | .2 |
| 10 | 2179707-0 | 1 | O-RING 43x3,5 | ..3 |
| 12 | Z002160-0 | 1 | SENSOR, CONTROL RACK POSITION | ..3 |
| 14 | 2179708-0 | 1 | O-RING 18x1,5 | ..3 |
| 16 | 9000116-1 | 2 | HEX.SOCK. HD.CAP SCR. DIN 912-M5x20-A2-70 | ..3 |
| 17 | 2179766-0 | 1 | PROTECTING CAP, RACK-SENSOR | ..3 |
| 18 | 2176745-2 | 1 | CONTROL-LEVER | .2 |
| 20 | 2176746-1 | 2 | DISTANCE-SHAFT | .2 |
| 22 | 3931062-0 | 4 | SPRING LOCK WASHER DIN 127-B5-FST-A3C | .2 |
| 24 | 3871222-0 | 4 | HEX.NUT ISO 4032-M5-8-A2C | .2 |

STEYRMOTORS
INNOVATION WITH LIGHTNESS

114 MARINE
TURBO DIESEL
+SOLAS

# FUEL FILTER

03094084-1

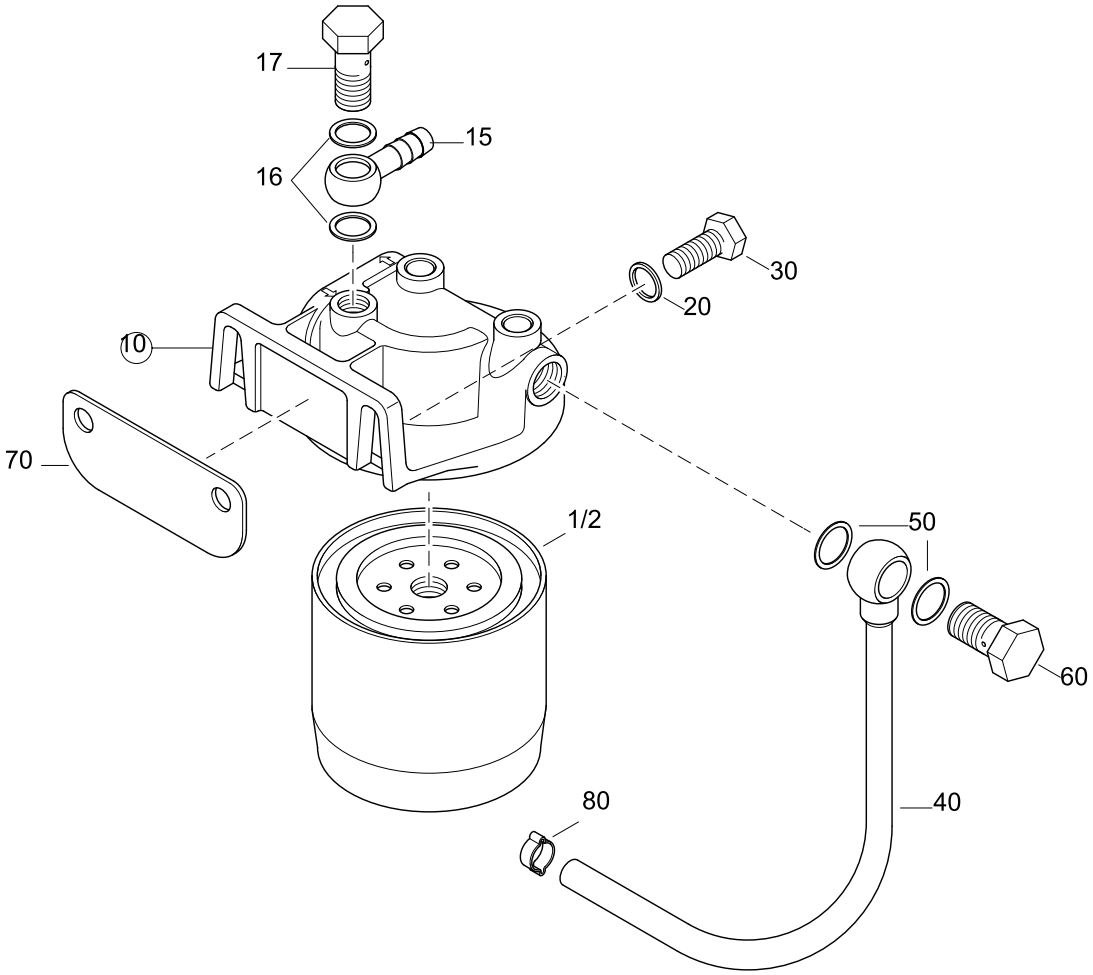

# FUEL FILTER

114 MARINE
TURBO DIESEL
+SOLAS

03094084-1

| Pos. | Part.-No. | Qty | Designation | Step |
|---|---|---|---|---|
| 1 | 2203710-0 | 1 | FUEL FILTER CARTIDGE SHORT | .2 |
| 2 | 2177745-1 | 1 | FUEL FILTER CARTRIDGE | .2 |
| 10 | Z002624-0 | 1 | BRACKET FUEL-FILTER & BANJO FITTING (PAINTED) | .2 |
| 15 | 2174383-1 | 1 | BANJO FITTING DN8 DIN 7642-A2C | ..3 |
| 16 | 3098015-0 | 2 | SEALING RING DIN 7603-A14x20-CU | ..3 |
| 17 | 9000053-0 | 1 | HOLLOW SCREW M14x1,5 DIN 7643-10-DAC A500 | ..3 |
| 20 | 3930075-0 | 2 | WASHER DIN 125 A10.5-140HV-A2 | .2 |
| 30 | 3802532-0 | 2 | HEX.HD.SCR. ISO 4017-M10x35-8.8 | .2 |
| 40 | 2203765-2 | 1 | FUEL LINE FILTER-PUMP | .2 |
| 50 | 3098015-0 | 2 | SEALING RING DIN 7603-A14x20-CU | .2 |
| 60 | 9000053-0 | 1 | HOLLOW SCREW M14x1,5 DIN 7643-10-DAC A500 | .2 |
| 70 | 2203736-2 | 1 | RETAINING STRAP FUELPUMP | .2 |
| 80 | 2178995-0 | 1 | HOSE CLAMP 17,5mm | .2 |

STEYRMOTORS
INNOVATION WITH LIGHTNESS

114 MARINE
TURBO DIESEL
+SOLAS

# GLOW PIN

03114084-0

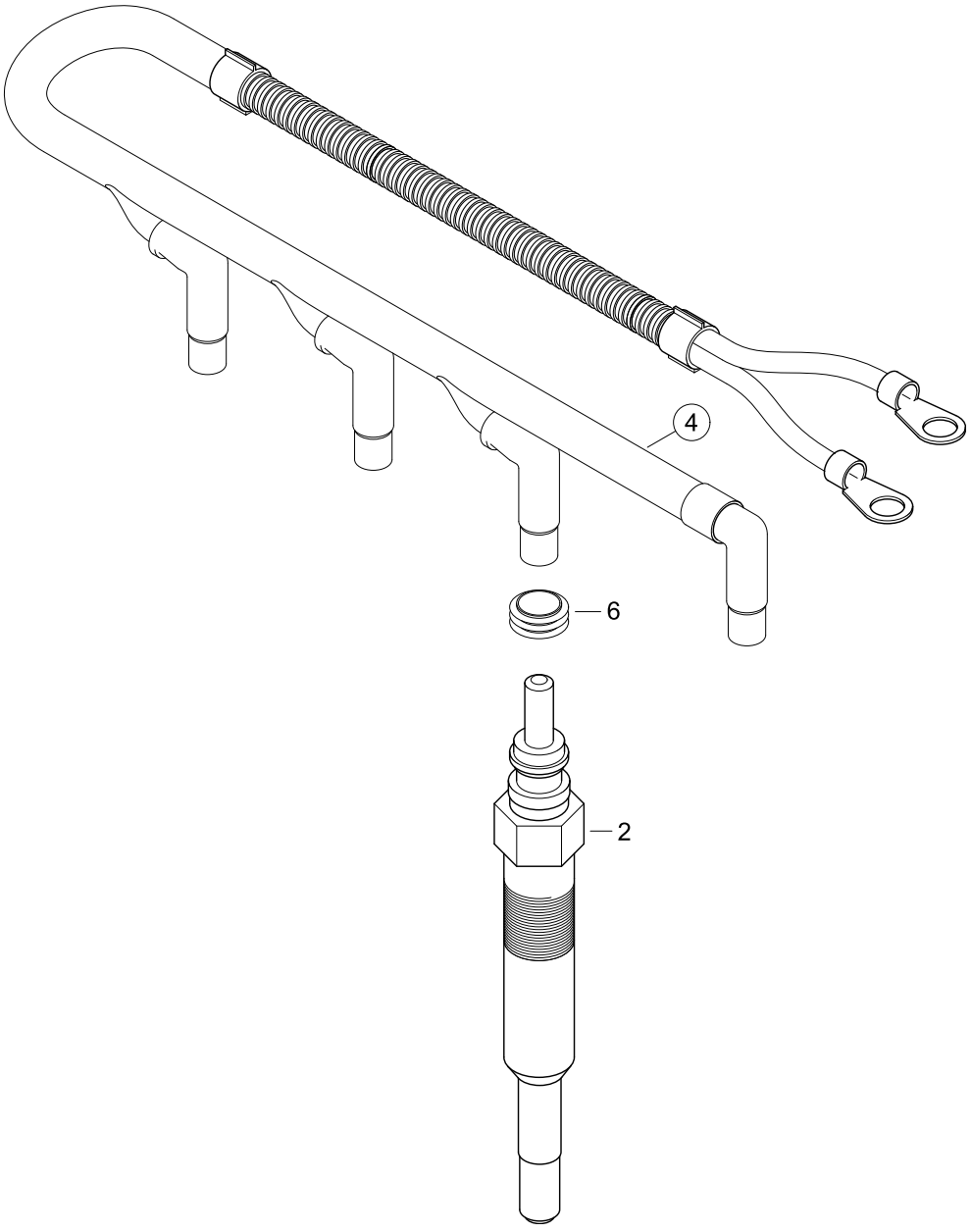

# GLOW PIN

114 MARINE
TURBO DIESEL
+SOLAS

03114084-0

| Pos. | Part.-No. | Qty | Designation | Step |
|---|---|---|---|---|
| 2 | 2177492-5 | 4 | GLOW PLUG | .2 |
| 4 | 2200215-4 | 1 | CABLE GLOW-PLUG ASSY. 4 CYL. | .2 |
| 6 | 2179256-0 | 4 | GASKET GLOW PLUG CONNECTOR | ..3 |

# POT. ACCELE., BOOST PRESSURE SENSOR

03124084-0

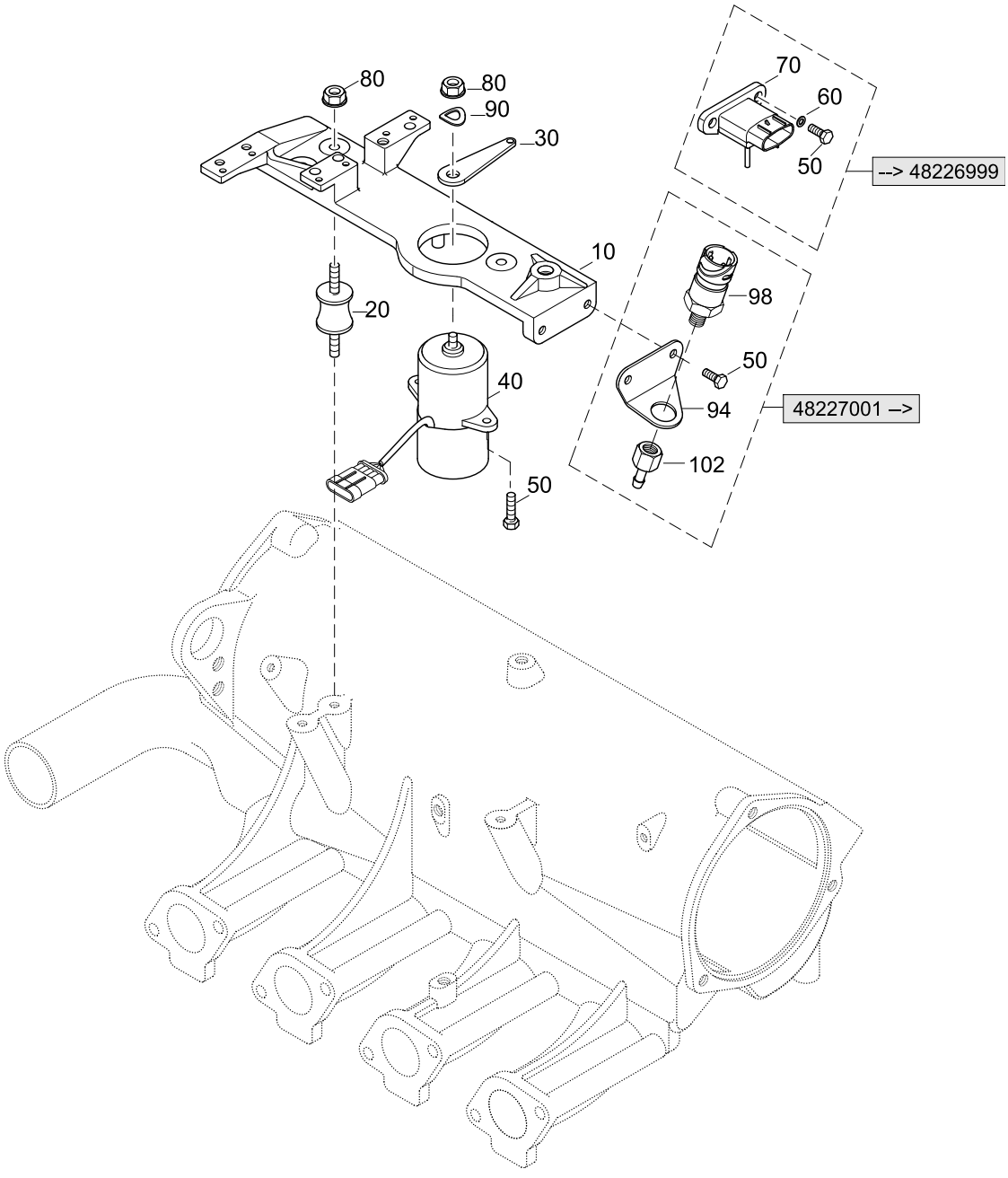

# POT. ACCELE., BOOST PRESSURE SENSOR

114 MARINE
TURBO DIESEL
+SOLAS

03124084-0

| Pos. | Part.-No. | Qty | Designation | Step |
|---|---|---|---|---|
| 10 | 2203771-9 | 1 | SHIFTPLATE PAINTED | .2 |
| 20 | 2203744-0 | 3 | RUBBER MOUNT | .2 |
| 30 | 2203777-0 | 1 | LEVER POTENTIOMETER | .2 |
| 40 | 2176860-1 | 1 | POTENTIOMETER ACCELERATOR | .2 |
| 50 | 3800238-0 | 4 | HEX.HD.SCR. ISO 4017-M6x12-A2-70 | .2 |
| 60 | 3930070-0 | 2 | WASHER DIN 125-6-140HV-A2 | .2 |
| 70 | 2203662-1 | 1 | BOOST-PRESSURE-SENSOR —>48226999 | .2 |
| 80 | 3880049-0 | 4 | HEX.FLANGE NUT DIN 6923-M6-A2-70 | .2 |
| 90 | 3932008-0 | 1 | SPRING WASHER DIN 137-B6-FST-A3C | .2 |
| 94 | 2203824-0 | 1 | BRACKET BOOST PRESSURE SENSOR 48227001—> | .2 |
| 98 | 2206305-0 | 1 | PRESSURE SENSOR 1/8-27 NPT 48227001—> | .2 |
| 102 | 2203834-1 | 1 | ADAPTER BOOST PRESSURE SENSOR 48227001—> | .2 |

STEYRMOTORS
INNOVATION WITH LIGHTNESS

114 MARINE
TURBO DIESEL
+SOLAS

# HIGH RISER, EXHAUSTPIPE

04016184-1

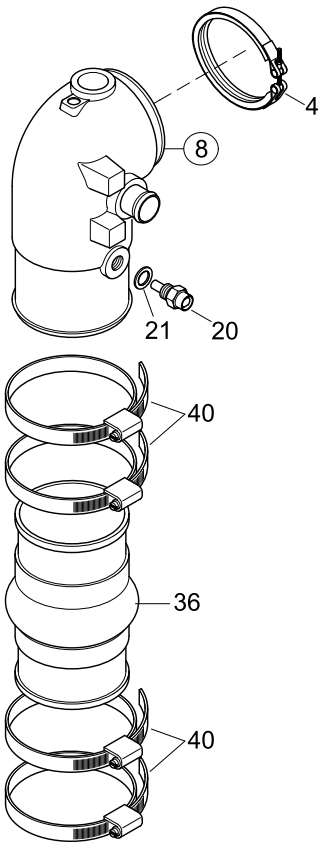

# HIGH RISER, EXHAUSTPIPE

114 MARINE
TURBO DIESEL
+SOLAS

04016184-1

| Pos. | Part.-No. | Qty | Designation | Step |
|---|---|---|---|---|
| 4 | 2173297-0 | 1 | CLAMP | .2 |
| 8 | Z002095-0 | 1 | ELBOW ASSY. EXHAUST (PAINTED) | .2 |
| 20 | 2174623-3 | 1 | COOLANT TEMPERATURE SENSOR | .2 |
| 21 | 3098013-0 | 1 | SEALING RING DIN 7603-A12x18-CU | .2 |
| 36 | O913591-0 | 1 | HOSE-EXHAUST PIPE | .2 |
| 40 | 2178943-0 | 4 | HOSE CLAMP 90-110/12 | .2 |

114 MARINE
TURBO DIESEL
+SOLAS

# WATERPIPE, THERMOSTAT

05034084-0

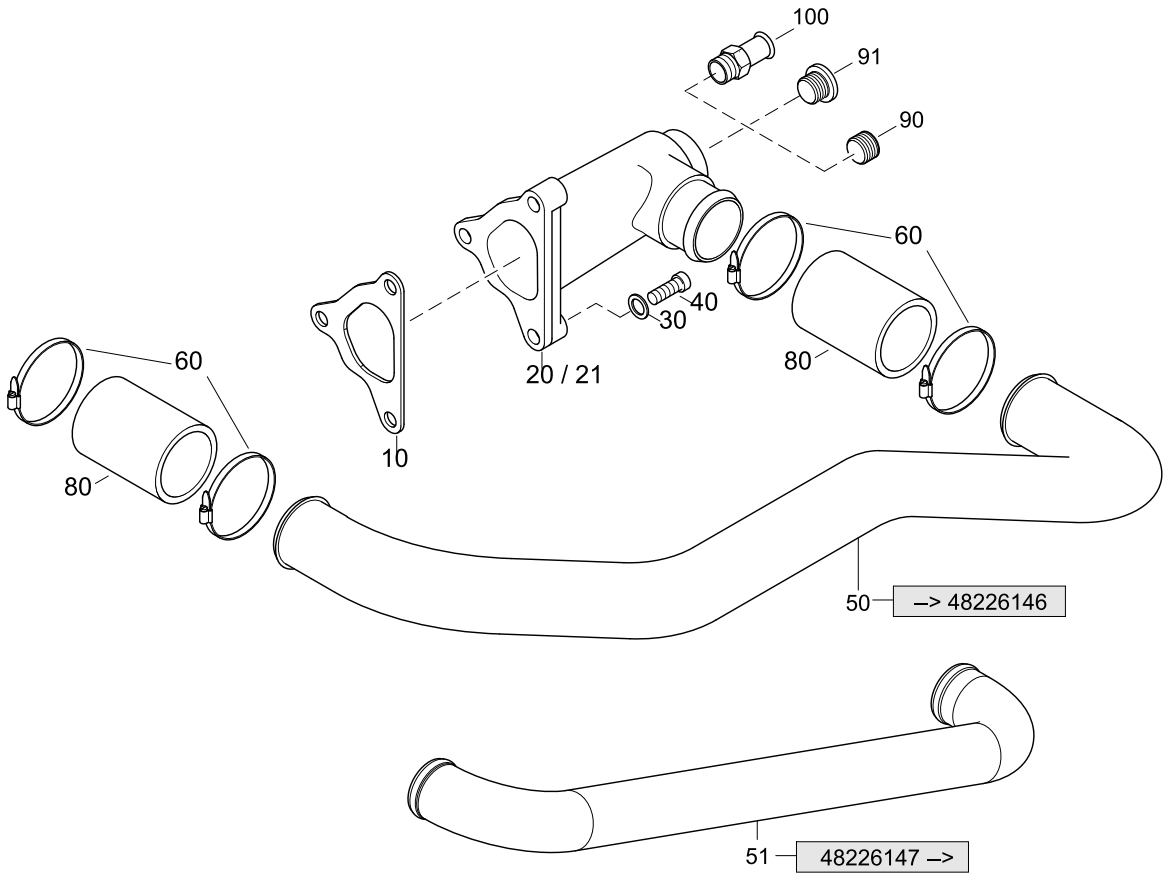


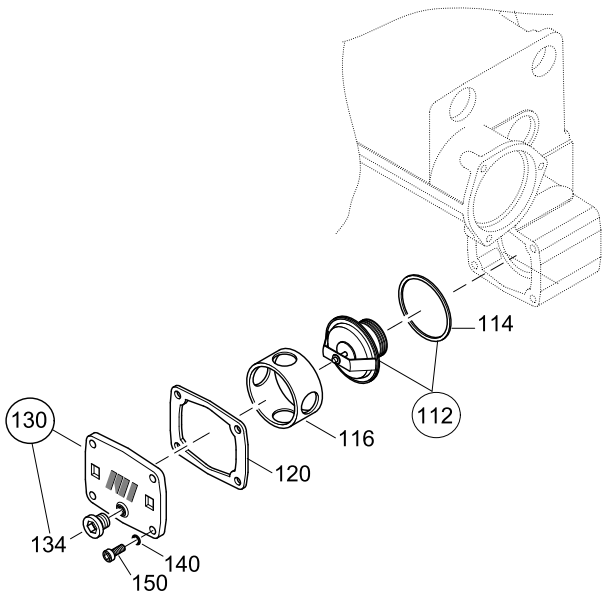

# WATERPIPE, THERMOSTAT

114 MARINE
TURBO DIESEL
+SOLAS

05034084-0

| Pos. | Part.-No. | Qty | Designation | Step |
|---|---|---|---|---|
| 10 | 2177572-0 | 1 | GASKET COOLANT MANIFOLD | .2 |
| 20 | 2177571-9 | 1 | MANIF.COOLANT INLET, 1/2-14NPT PAINTED —>48218999 | .2 |
| 21 | 2177571-7 | 1 | COOLANT INLET ASSY. M22x1,5 (PAINTED) 48219001—> | .2 |
| 30 | 3932008-0 | 3 | SPRING WASHER DIN 137-B6-FST-A3C | .2 |
| 40 | 3862327-0 | 3 | HEX.SOCK. HD.CAP SCR. DIN 912-M6x25-8.8-A2C | .2 |
| 50 | 2203735-0 | 1 | PIPE ENGINE-COOLANT —>48226146 | .2 |
| 51 | 2203735-1 | 1 | PIPE ENGINE-COOLANT 48226147—> | .2 |
| 60 | 2174406-0 | 4 | HOSE CLAMP 25-40/9 | .2 |
| 80 | 2177867-0 | 2 | HOSE, ENGINE COOLANT | .2 |
| 90 | O913564-0 | 1 | SCREW PLUG 1/2-14 NPTF —>48218999 | .2 |
| 91 | 9000590-0 | 1 | HEX.SOCK.SCR.PLUG WITH RUBBER SEAL M22x1,5 48219001—> | .2 |
| 100 | 2178607-1 | 1 | HOSE CONNECTOR HEATER —>48218999 | .2 |
| 112 | 2173621-1 | 1 | THERMOSTAT WITH SEALING RING 80°C | .2 |
| 114 | 2178414-0 | 1 | SEALING RING THERMOSTAT | ..3 |
| 116 | 2178946-0 | 1 | RETAINER THERMOSTAT | .2 |
| 120 | 2178339-0 | 1 | GASKET THERMOSTAT COVER | .2 |
| 130 | 2178204-9 | 1 | COVER, THERMOSTAT HOUSING (PAINTED) | .2 |
| 134 | 9000586-0 | 1 | HEX.SOCK.SCR.PLUG WITH RUBBER SEAL M12x1,5 | ..3 |
| 140 | 3932008-0 | 4 | SPRING WASHER DIN 137-B6-FST-A3C | .2 |
| 150 | 3862320-0 | 4 | HEX.SOCK. HD.CAP SCR. DIN 912-M6x20-8.8-A2C | .2 |

# WATERPUMP

05044084-0

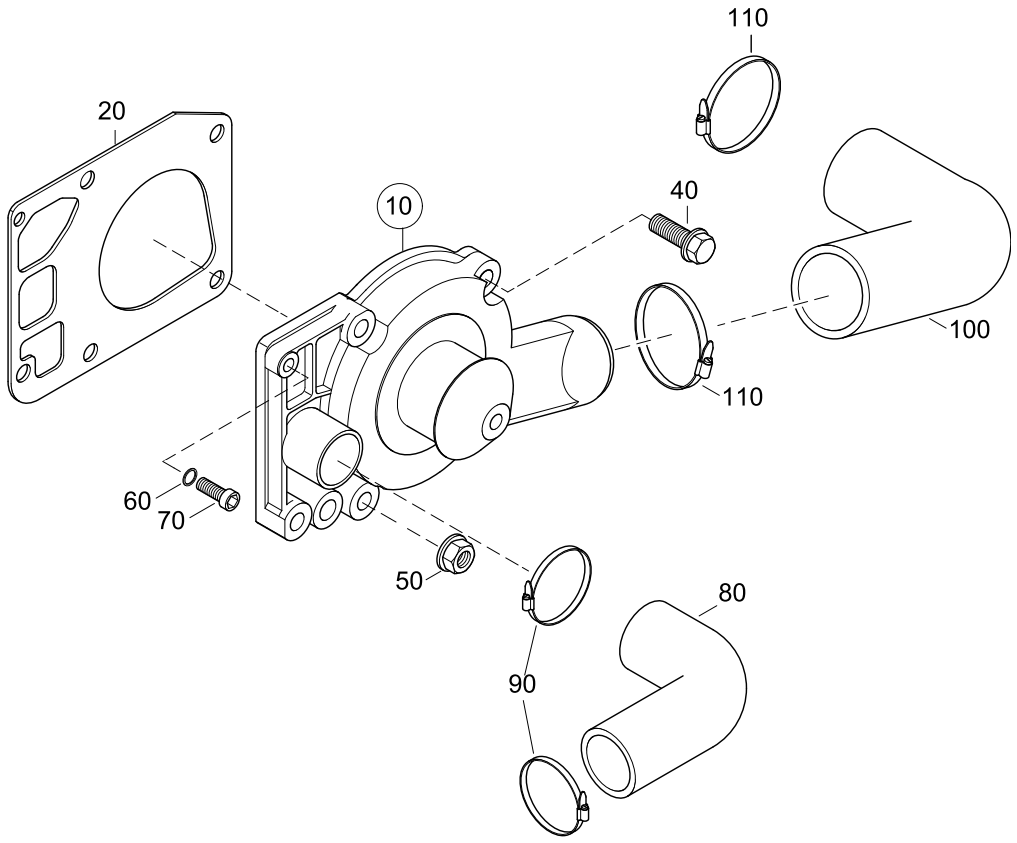

# WATERPUMP

114 MARINE
TURBO DIESEL
+SOLAS

05044084-0

| Pos. | Part.-No. | Qty | Designation | Step |
|---|---|---|---|---|
| 10 | Z002425-0 | 1 | WATERPUMP ASSY. (PAINTED) INCL. GASKET | .2 |
| 20 | 2177329-2 | 1 | GASKET WATERPUMP-HOUSING | ..3 |
| 40 | 9000431-0 | 4 | HEX.FLANGE BOLT EN 1665-M8x30-10.9-DAC | .2 |
| 50 | 9000056-1 | 1 | HEX.FLANGE NUT DIN 6923-M8-8-A2C | .2 |
| 60 | 3932008-0 | 1 | SPRING WASHER DIN 137-B6-FST-A3C | .2 |
| 70 | 3862327-0 | 1 | HEX.SOCK. HD.CAP SCR. DIN 912-M6x25-8.8-A2C | .2 |
| 80 | 2178462-0 | 1 | HOSE-ELBOW 32/90°x 88 | .2 |
| 90 | 2174406-0 | 2 | HOSE CLAMP 25-40/9 | .2 |
| 100 | 2173812-0 | 1 | HOSE-ELBOW | .2 |
| 110 | 2174407-0 | 2 | HOSE CLAMP 40-60/9 | .2 |

# DRIVE BELTS, PULLEYS, TENSIONER

05054084-0

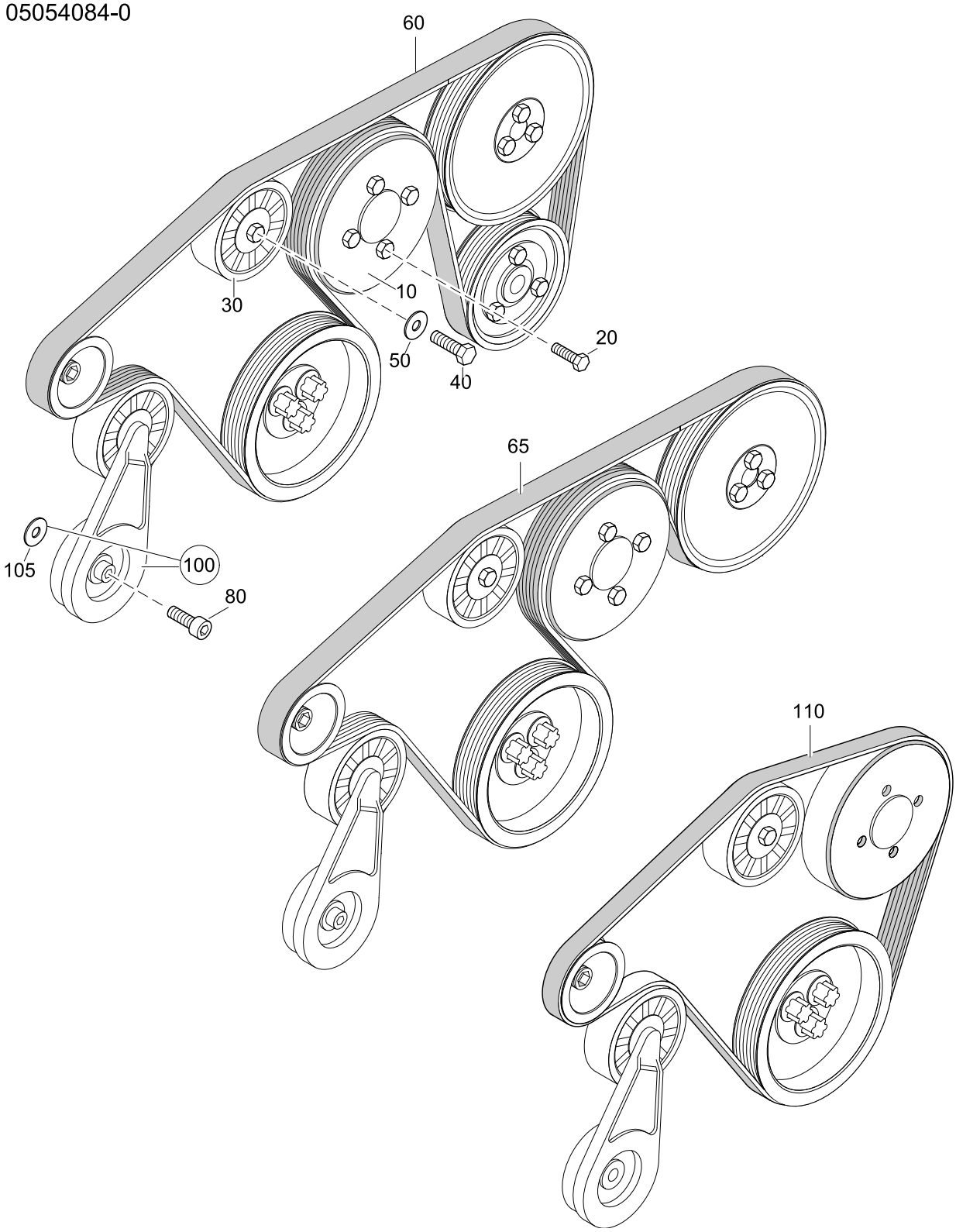

# DRIVE BELTS, PULLEYS, TENSIONER

114 MARINE
TURBO DIESEL
+SOLAS

05054084-0

| Pos. | Part.-No. | Qty | Designation | Step |
|---|---|---|---|---|
| 10 | 2203562-1 | 1 | PULLEY (KTL) | .2 |
| 20 | 9000287-0 | 4 | HEX.FLANGE BOLT EN 1665-M6x12-8.8 | .2 |
| 30 | 2203559-0 | 1 | IDLER PULLEY ASSY. | .2 |
| 40 | 3802527-0 | 1 | HEX.HD.SCR. ISO 4017-M10x30-A4 | .2 |
| 50 | 3936107-0 | 1 | WASHER LARGE SERIES DIN 9021-10.5-140HV-A4 | .2 |
| 60 | 2203742-0 | 1 | POLY-V BELT L=1855 | .2 |
| 65 | 2203742-1 | 1 | POLY-V BELT L=1675 | .2 |
| 80 | 3862552-0 | 1 | HEX.SOCK. HD.CAP SCR. DIN 912-M10x60-8.8-A2C | .2 |
| 100 | Z002421-0 | 1 | SPARE P. TENSIONER POLY-V BELT | .2 |
| 105 | 9000438-0 | 1 | SHIM RING DIN 988-10x16x0.3 | ..3 |
| 110 | 2205539-1 | 1 | POLY-V BELT L=1005mm | .2 |

114 MARINE
TURBO DIESEL
+SOLAS

# RAW WATER PUMP

05104084-0

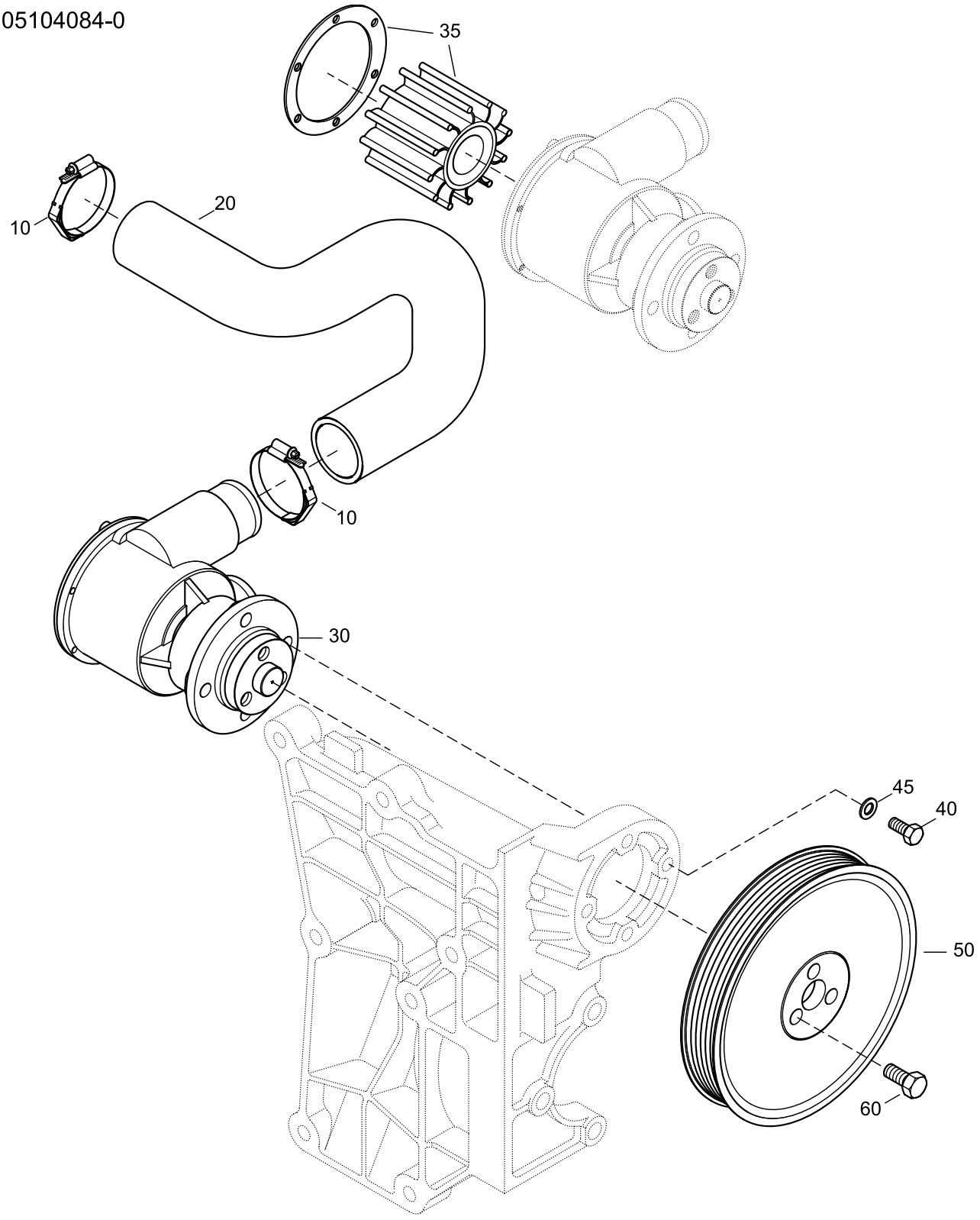

# RAW WATER PUMP

114 MARINE
TURBO DIESEL
+SOLAS

05104084-0

| Pos. | Part.-No. | Qty | Designation | Step |
|---|---|---|---|---|
| 10 | 2179044-0 | 2 | HOSE CLAMP WITH SPRING 25-40/9 | .2 |
| 20 | 2203768-0 | 1 | HOSE PUMP-TANDEM COOLER | .2 |
| 30 | 2203714-9 | 1 | RAW WATER PUMP (PAINTED) | .2 |
| 35 | Z011753-2 | 1 | SERVICE KIT, RAW WATER PUMP (WITH GREASE) | .2 |
| 40 | 3800221-0 | 4 | HEX.HD.SCR. ISO 4017-M6x20-A2-70 | .2 |
| 45 | 3930070-0 | 4 | WASHER DIN 125-6-140HV-A2 | .2 |
| 50 | 2203746-0 | 1 | PULLEY RAW WATER PUMP | .2 |
| 60 | 3860152-0 | 3 | HEX.SOCK. HD.CAP SCR. DIN 912-M8x16-A2-70 | .2 |

# RAW WATER PIPES, FUEL-OIL COOLER

05124084-1

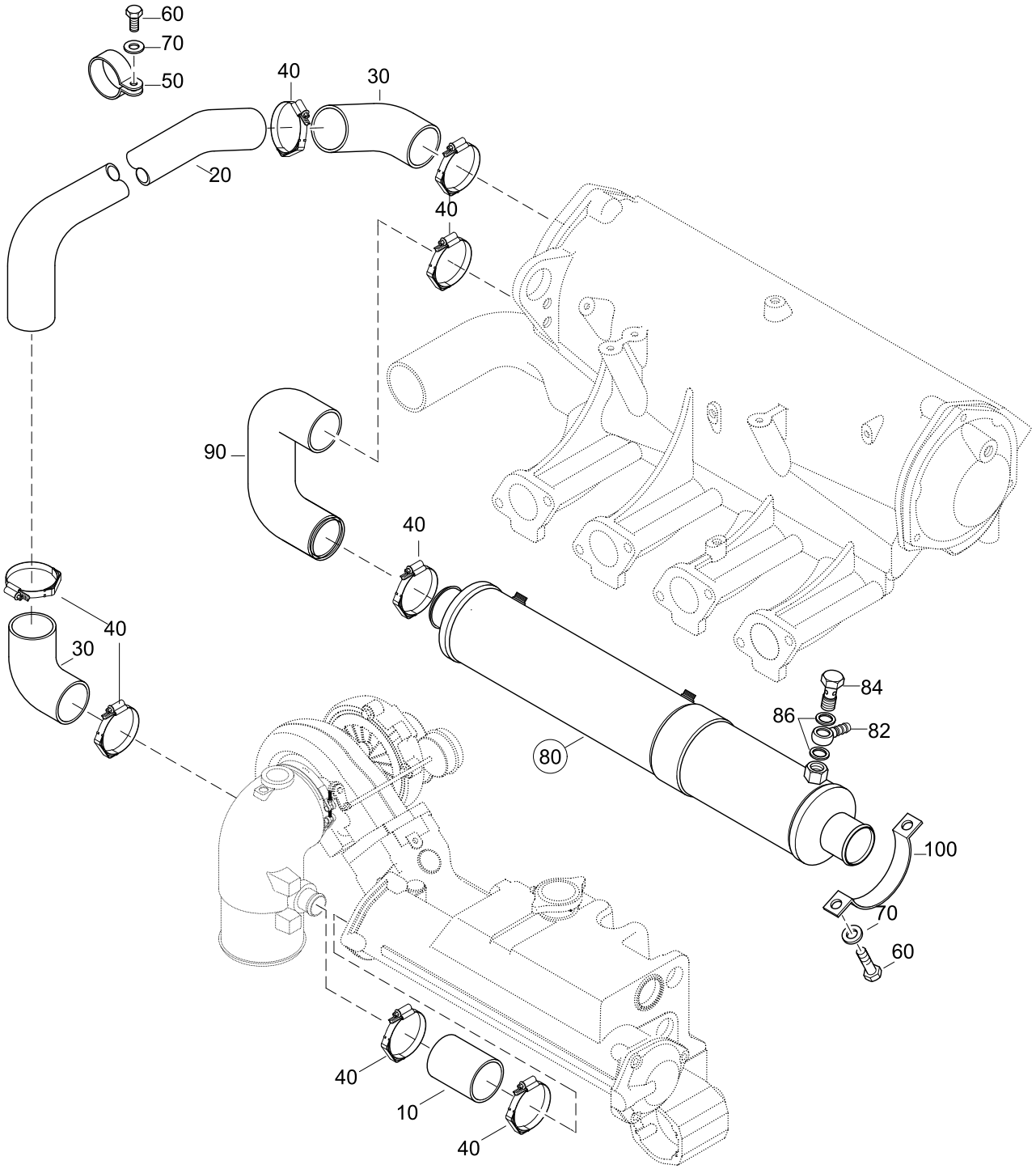

# RAW WATER PIPES, FUEL-OIL COOLER

114 MARINE
TURBO DIESEL
+SOLAS

05124084-1

| Pos. | Part.-No. | Qty | Designation | Step |
|---|---|---|---|---|
| 10 | 2177760-0 | 1 | COOLING-WATER HOSE | .2 |
| 20 | 2203758-0 | 1 | PIPE ENGINE-COOLANT | .2 |
| 30 | 2173704-0 | 2 | HOSE-ELBOW 32/90°x 58 | .2 |
| 40 | 2179044-0 | 8 | HOSE CLAMP WITH SPRING 25-40/9 | .2 |
| 50 | 2178446-0 | 1 | PIPE CLAMP 32/15 | .2 |
| 60 | 3800233-0 | 5 | HEX.HD.SCR. ISO 4017-M6x16-A2-70 | .2 |
| 70 | 3930070-0 | 5 | WASHER DIN 125-6-140HV-A2 | .2 |
| 80 | Z002097-0 | 1 | TANDEM COOLER ASSY. (PAINTED) | .2 |
| 82 | 2174383-1 | 1 | BANJO FITTING DN8 DIN 7642-A2C | ..3 |
| 84 | 9000053-0 | 1 | HOLLOW SCREW M14x1,5 DIN 7643-10-DAC A500 | ..3 |
| 86 | 3098015-0 | 2 | SEALING RING DIN 7603-A14x20-CU | ..3 |
| 90 | 2203769-0 | 1 | MOLDED HOSE TDK-INTERCOOLER | .2 |
| 100 | 2203731-0 | 2 | PIPE CLAMP 42/15 | .2 |

114 MARINE TURBO DIESEL +SOLAS

# ALTERNATOR

06014084-0

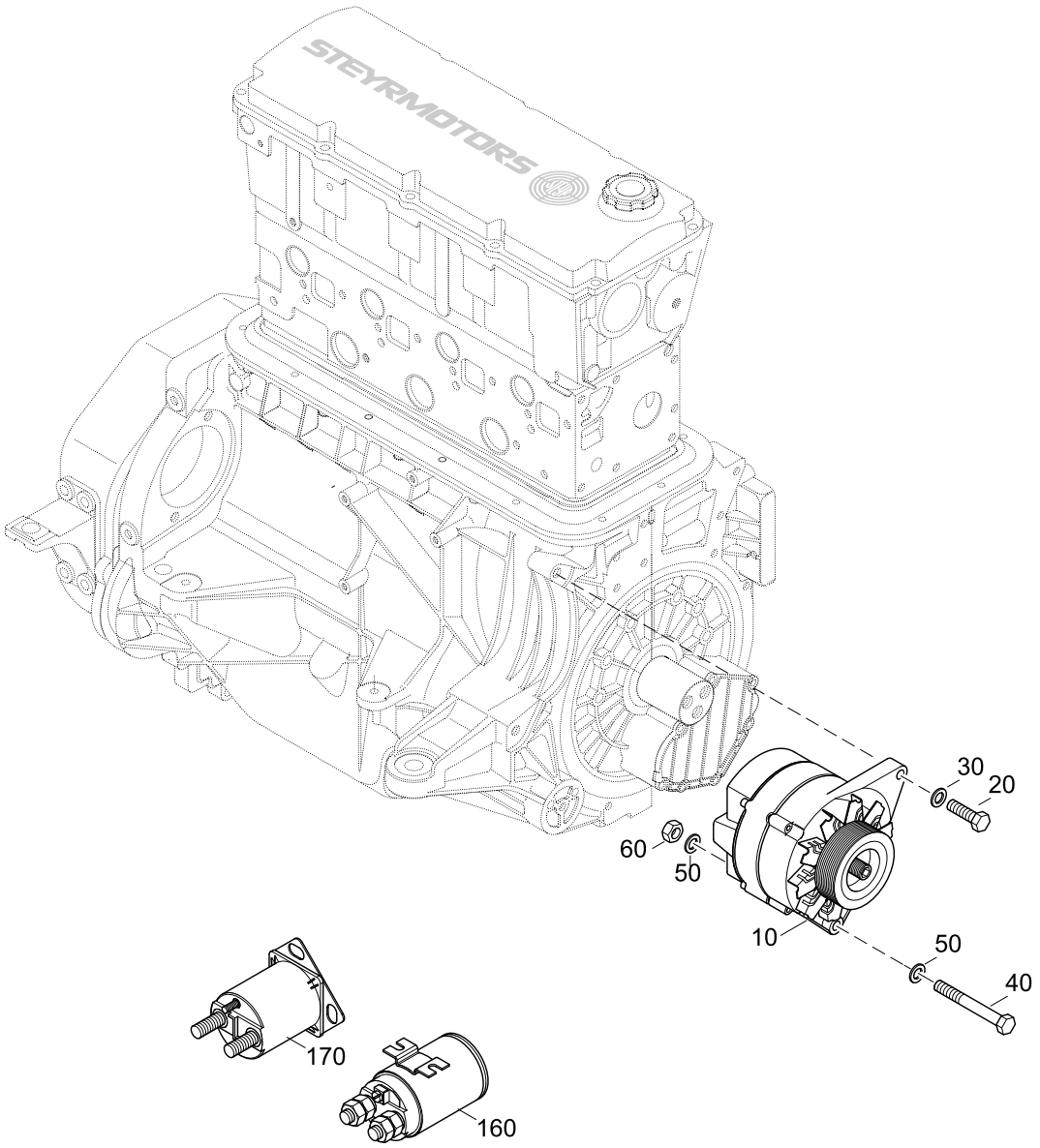

# ALTERNATOR

114 MARINE
TURBO DIESEL
+SOLAS

06014084-0

| Pos. | Part.-No. | Qty | Designation | Step |
|---|---|---|---|---|
| 10 | 2203713-9 | 1 | ALTERNATOR 14V/90A (PAINTED) | .2 |
| 20 | 3802437-0 | 1 | HEX.HD.SCR. ISO 4017-M8x35-8.8-A2C | .2 |
| 30 | 3930103-0 | 1 | WASHER DIN 125-8.4-140HV-A2 | .2 |
| 40 | 3800575-0 | 1 | HEX.HD.BOLT ISO 4014-M10x130-8.8-A3C | .2 |
| 50 | 3930075-0 | 2 | WASHER DIN 125 A10.5-140HV-A2 | .2 |
| 60 | 3870030-0 | 1 | HEX.NUT ISO 4032-M10-A2-70 | .2 |
| 160 | 9000457-0 | 1 | RELAY 12V/150A | .2 |
| 170 | 2206161-0 | 1 | POWER SOLENOID 12V | .2 |

06034084-0

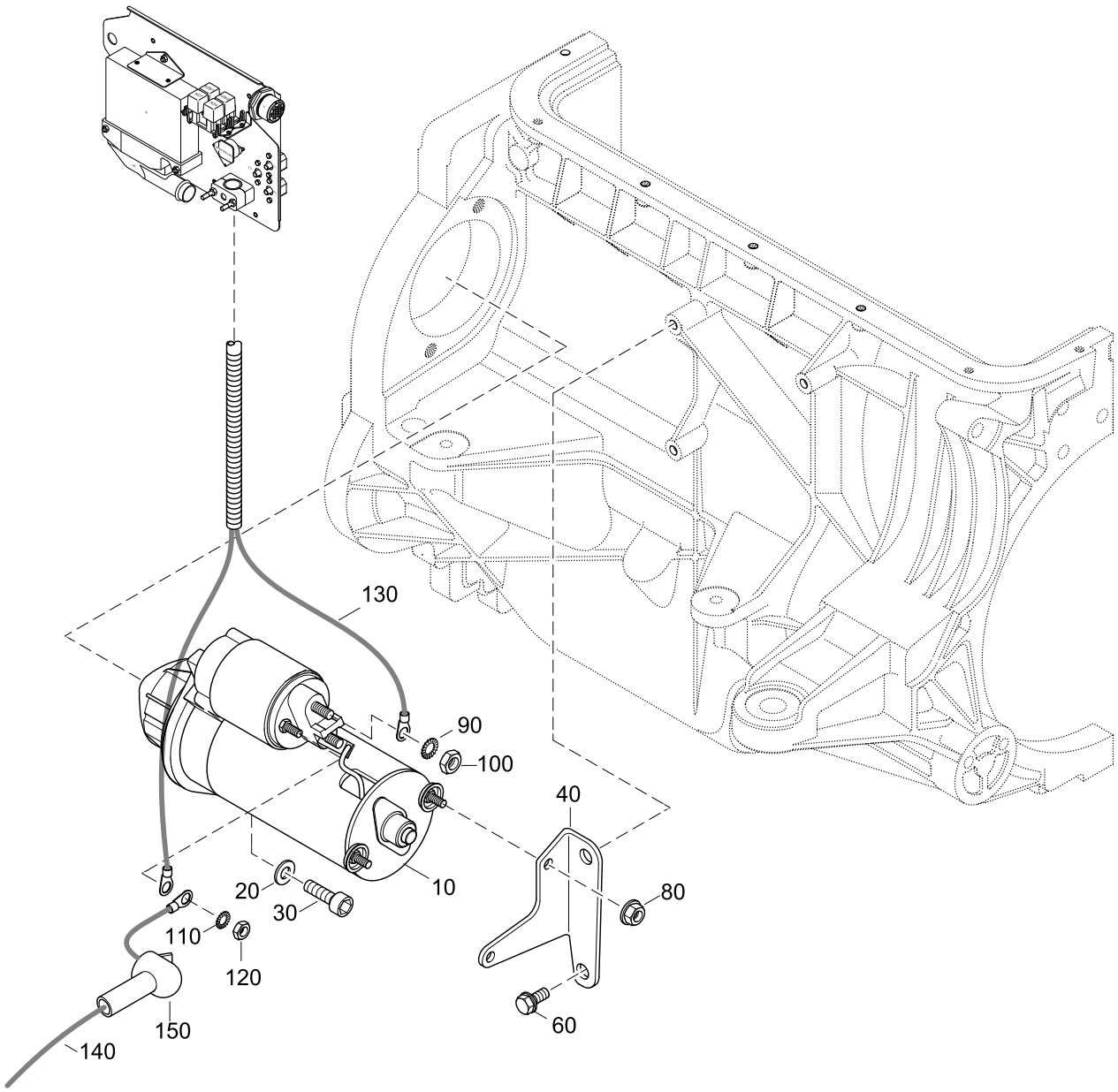

## STARTING

114 MARINE
TURBO DIESEL
+SOLAS

06034084-0

| Pos. | Part.-No. | Qty | Designation | Step |
|---|---|---|---|---|
| 10 | 2040077-8 | 1 | STARTER 12V (PAINTED) | .2 |
| 20 | 3932025-0 | 2 | SPRING WASHER DIN 137-A10-FST-A3C | .2 |
| 30 | 3860149-0 | 2 | HEX.SOCK. HD.CAP SCR. DIN 912-M10x40-8.8-A3C | .2 |
| 40 | 2203730-0 | 1 | BRACKET STARTER | .2 |
| 60 | 9000305-0 | 2 | HEX.FLANGE BOLT EN 1665-M8x20-10.9-DAC | .2 |
| 80 | 3880049-0 | 2 | HEX.FLANGE NUT DIN 6923-M6-A2-70 | .2 |
| 90 | 9000013-0 | 2 | TOOTHED LOCK WASHER EXTERNAL DIN 6797-A8.4-1.4310 | .2 |
| 100 | 3870045-0 | 1 | HEX.NUT ISO 4032-M8-A2-70 | .2 |
| 110 | 9000040-0 | 1 | TOOTHED LOCK WASHER EXTERN. DIN 6797-A5.3-1.4310 | .2 |
| 120 | 3870050-0 | 1 | HEX.NUT DIN 934-M5-A2-70 | .2 |
| 130 | Z002167-0 | 1 | HARNESS STARTER (SPARE) | .2 |
| 140 | 2206213-0 | 1 | BATTERY CABLE RED | .2 |
| 150 | O910111-0 | 1 | RUBBER PROTECTION CAP | .2 |

114 MARINE
TURBO DIESEL
+SOLAS

# ENGINE HARNESS
## 48221067 --> 48226999

06054084-1

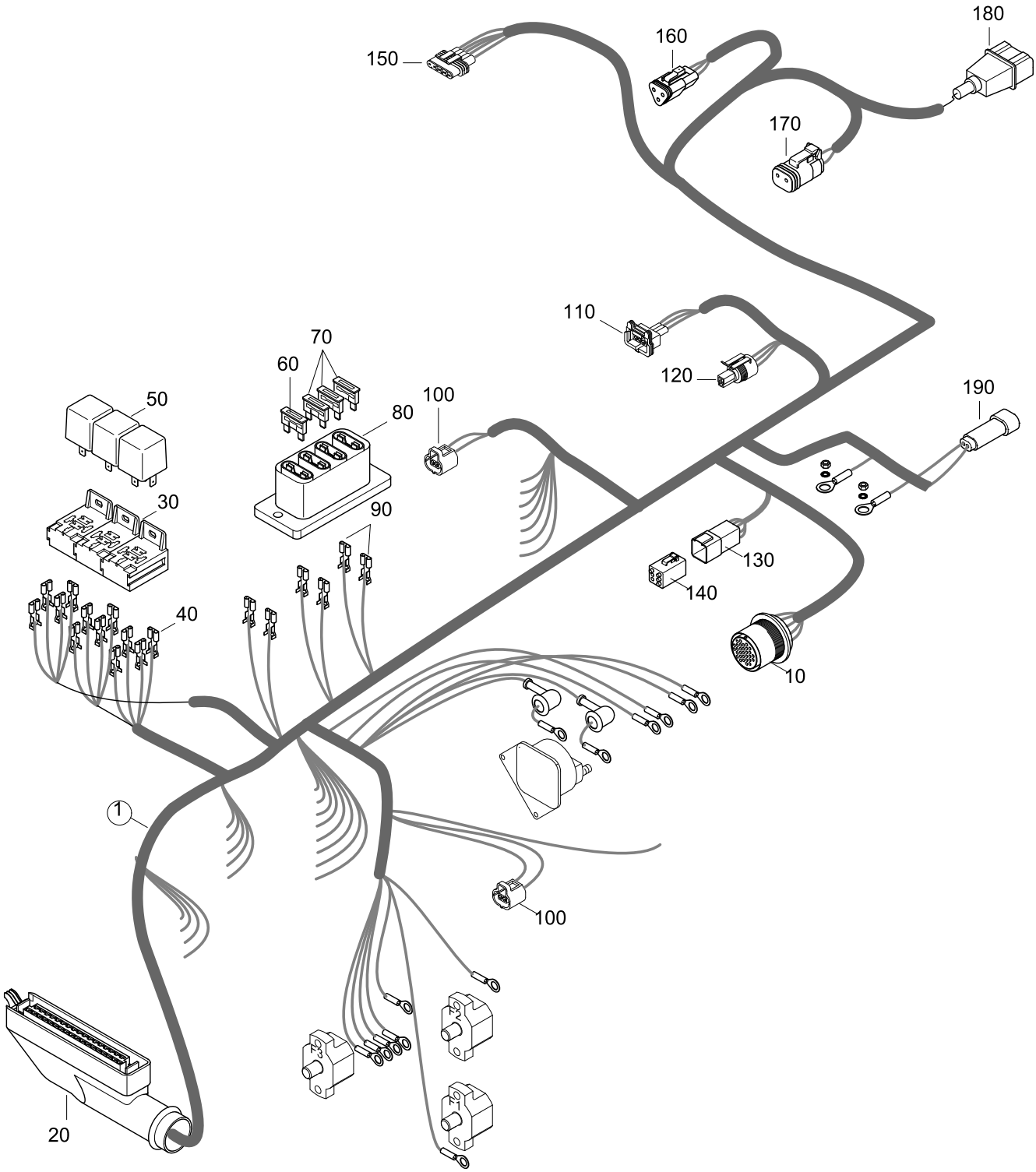

## ENGINE HARNESS
## 48221067 --> 48226999

114 MARINE
TURBO DIESEL
+SOLAS

06054084-1

| Pos. | Part.-No. | Qty | Designation | Step |
|---|---|---|---|---|
| 1 | 2206207-2 | 1 | ENGINE HARNESS | .2 |
| 10 | Z002410-0 | 1 | CABLE-PLUG PAIR COMPL. 23-POLE | ..3 |
| 20 | Z002411-0 | 1 | RECEPTACLE COMPL. ECU | ..3 |
| 30 | 9000421-0 | 3 | RELAY SOCKET | ..3 |
| 40 | 3499650-0 | 19 | RECEPTACLE 6,3-2,5 | ..3 |
| 50 | 9000183-0 | 3 | RELAY 12V 40A | ..3 |
| 60 | 12156 | 1 | FUSE 5A, LIGHTBRAUN | ..3 |
| 70 | 11345 | 3 | FUSE 10A, RED | ..3 |
| 80 | 2206152-0 | 1 | FUSE CARRIER 4 WAY | ..3 |
| 90 | 9000125-0 | 6 | BLADE TERMINAL 6,3x2,5 / 1,5-2,5 | ..3 |
| 100 | Z002046-1 | 2 | CONNECTOR COOLANT TEMP. SENSOR | ..3 |
| 110 | Z002412-0 | 1 | PLUG COMPL. REVOLUTION SENSOR | ..3 |
| 120 | Z002413-0 | 1 | CONNECTOR OIL PRESSURE SENSOR | ..3 |
| 130 | Z002415-0 | 1 | PLUG COMPL. DIAGNOSTIC 6 WAY | ..3 |
| 140 | 2178729-3 | 1 | DIAGNOSTIC PLUG 6-WAY | ..3 |
| 150 | Z002414-0 | 1 | CONNECTOR POTENTI. ACCELERATOR | ..3 |
| 160 | Z002416-0 | 1 | PLUG POT. CONTROL ROD POSITION 3-POLE | ..3 |
| 170 | Z002417-0 | 1 | PLUG COMPL. CONTROL SOLENOID 2-POLE | ..3 |
| 180 | Z002418-0 | 1 | PLUG ASSY BOOST PRESSURE SENSO R 3-POLE | ..3 |
| 190 | Z002419-0 | 1 | PLUG COMPL. GEAR SWITCH 2 WAY | ..3 |

114 MARINE
TURBO DIESEL
+SOLAS

# ENGINE HARNESS
## 48227001 -->

06056184-2

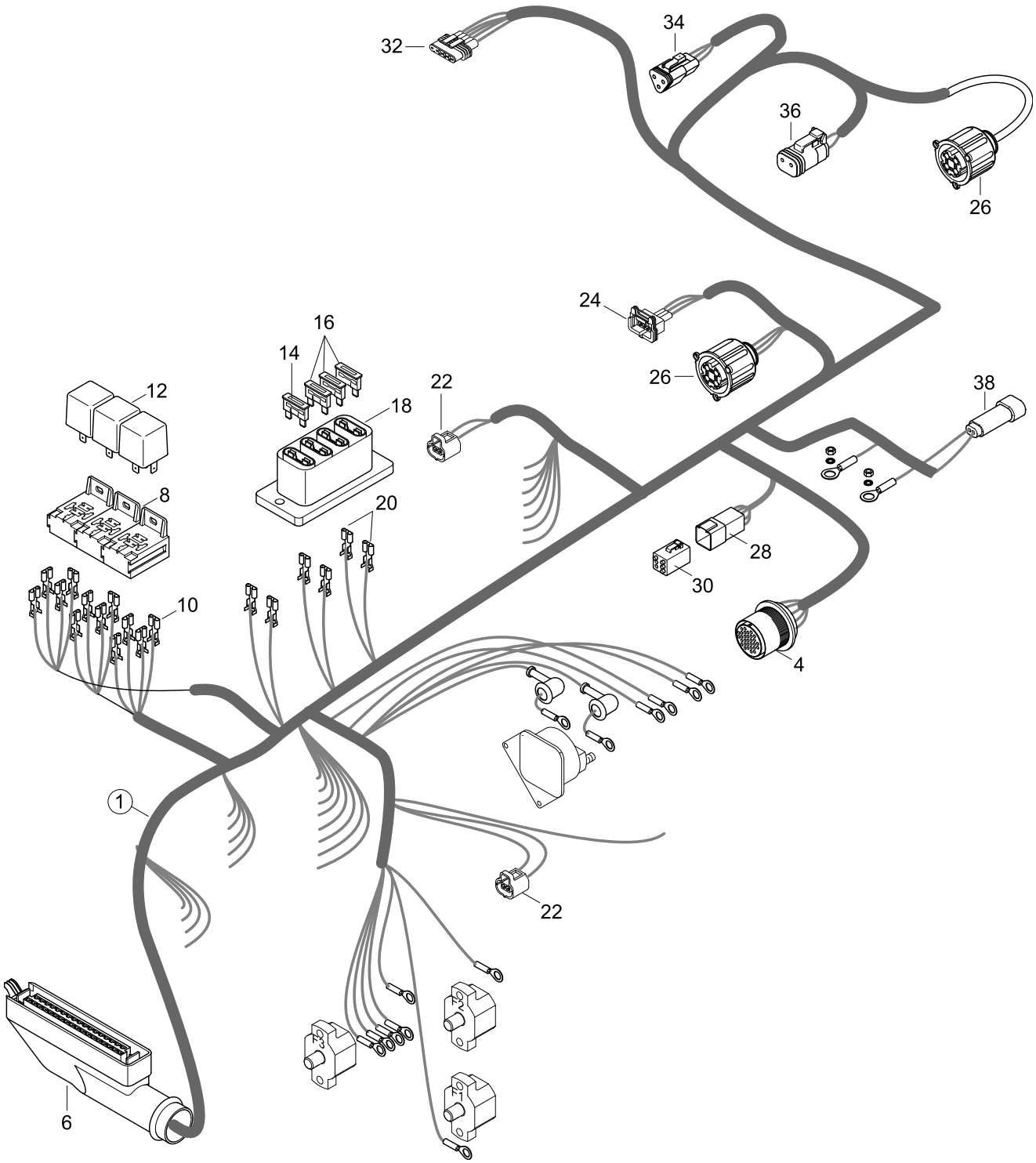

## ENGINE HARNESS
## 48227001 -->

114 MARINE
TURBO DIESEL
+SOLAS

06056184-2

| Pos. | Part.-No. | Qty | Designation | Step |
|---|---|---|---|---|
| 1 | Z002143-0 | 1 | ENGINE HARNESS ASSY. 12V (FROM 2007) | .2 |
| 4 | Z002410-0 | 1 | CABLE-PLUG PAIR COMPL. 23-POLE | ..3 |
| 6 | Z002411-0 | 1 | RECEPTACLE COMPL. ECU | ..3 |
| 8 | 9000421-0 | 3 | RELAY SOCKET | ..3 |
| 10 | 3499650-0 | 19 | RECEPTACLE 6,3-2,5 | ..3 |
| 12 | 9000183-0 | 3 | RELAY 12V 40A | ..3 |
| 14 | 12156 | 1 | FUSE 5A, LIGHTBRAUN | ..3 |
| 16 | 11345 | 3 | FUSE 10A, RED | ..3 |
| 18 | 2206152-0 | 1 | FUSE CARRIER 4 WAY | ..3 |
| 20 | 9000125-0 | 6 | BLADE TERMINAL 6,3x2,5 / 1,5-2,5 | ..3 |
| 22 | Z002046-1 | 2 | CONNECTOR COOLANT TEMP. SENSOR | ..3 |
| 24 | Z002412-0 | 1 | PLUG COMPL. REVOLUTION SENSOR | ..3 |
| 26 | Z002139-0 | 2 | PLUG, PRESSURE SENSOR 3-POLE | ..3 |
| 28 | Z002415-0 | 1 | PLUG COMPL. DIAGNOSTIC 6 WAY | ..3 |
| 30 | 2178729-3 | 1 | DIAGNOSTIC PLUG 6-WAY | ..3 |
| 32 | Z002414-0 | 1 | CONNECTOR POTENTI. ACCELERATOR | ..3 |
| 34 | Z002416-0 | 1 | PLUG POT. CONTROL ROD POSITION 3-POLE | ..3 |
| 36 | Z002417-0 | 1 | PLUG COMPL. CONTROL SOLENOID 2-POLE | ..3 |
| 38 | Z002419-0 | 1 | PLUG COMPL. GEAR SWITCH 2 WAY | ..3 |

# SECURETYSYSTEM, FUSES, ECU, E-BOX

06064084-2

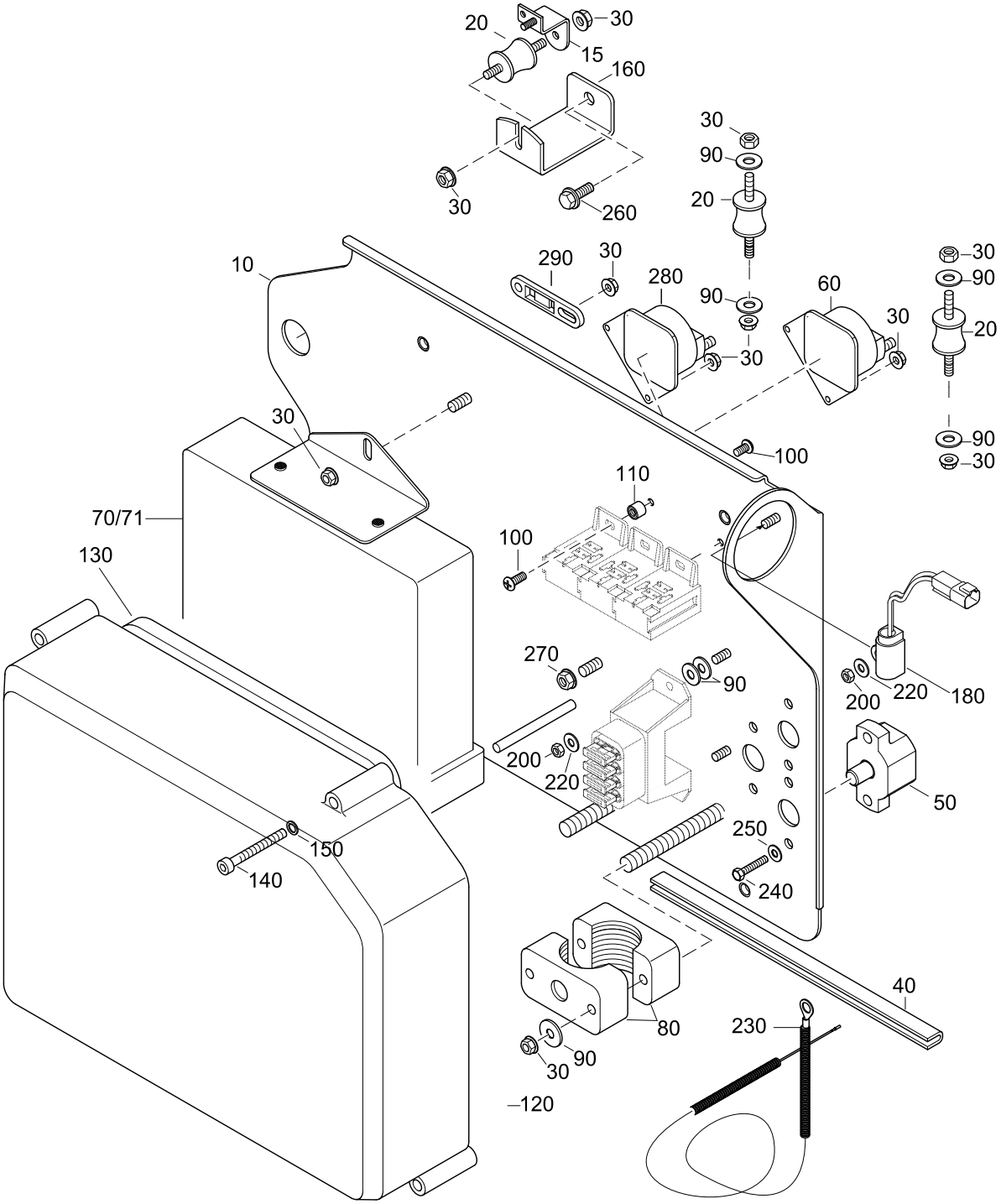

# SECURETYSYSTEM, FUSES, ECU, E-BOX

114 MARINE
TURBO DIESEL
+SOLAS

06064084-2

| Pos. | Part.-No. | Qty | Designation | Step |
|---|---|---|---|---|
| 10 | 2203723-1 | 1 | BASE PLATE | .2 |
| 15 | 2203723-B | 1 | BRACKET BASEPLATE | ..3 |
| 20 | 2203744-0 | 4 | RUBBER MOUNT | .2 |
| 30 | 3880049-0 | 13 | HEX.FLANGE NUT DIN 6923-M6-A2-70 | .2 |
| 40 | 2173329-0 | 0.2 | EDGE PROTECTOR | .2 |
| 50 | O913774-0 | 3 | AUTOMATIC CIRCUIT BREAKER 50A | .2 |
| 60 | 9000187-0 | 1 | SOLENOID STARTER | .2 |
| 70 | 2176821-3 | 1 | ECU 114 81kW-3800rpm —>48226999 | .2 |
| 71 | 2176844-1 | 1 | ECU 114 81kW-3800rpm 48227001—> | .2 |
| 80 | 2203753-0 | 2 | CLAMP, FASTEN ENGINE-HARNESS | .2 |
| 90 | 9000012-0 | 10 | WASHER LARGE SERIES DIN 9021-6.4-140HV-A2 | .2 |
| 100 | 9000215-1 | 4 | CROSS RECESS PAN HD.SCR. ISO 7045-M5x6-A2-50-H | .2 |
| 110 | 2179004-0 | 2 | SILENT BLOCK M5 | .2 |
| 120 | 2203720-0 | 1 | COVERING, ENGINE ELECTRIC | .2 |
| 130 | 2171410-1 | 1 | SEAL, COVERING ENGINE ELECTRIC | .2 |
| 140 | 9000003-0 | 5 | HEX.SOCK. HD.CAP SCR. DIN 912-M5x55-A2-70 | .2 |
| 150 | 3930069-0 | 5 | WASHER ISO 7089-5-200HV-A2 | .2 |
| 160 | 2203724-0 | 2 | SUPPORT BASE PLATE | .2 |
| 180 | 2178971-G | 1 | INVERSION-SWITCH ASSY | .2 |
| 200 | 3870050-0 | 3 | HEX.NUT DIN 934-M5-A2-70 | .2 |
| 220 | 3930069-0 | 3 | WASHER ISO 7089-5-200HV-A2 | .2 |
| 230 | 2178975-0 | 1 | CABLE INVERSION-SWITCH SOLAS | .2 |
| 240 | 9000424-0 | 6 | HEX.HD.SCR. ISO 4017-8/32UNCx20-A2-70 | .2 |
| 250 | 3930072-0 | 6 | WASHER LARGE SERIES DIN 9021-4.3-A2 | .2 |
| 260 | 3800224-0 | 2 | HEX.HD.SCR. ISO 4017-M8x20-A2-70 | .2 |
| 270 | 3880049-0 | 1 | HEX.FLANGE NUT DIN 6923-M6-A2-70 | .2 |
| 280 | 2206161-0 | 1 | POWER SOLENOID 12V | .2 |
| 290 | 2178870-0 | 1 | FIXTURE, CABLE TIE | .2 |

114 MARINE
TURBO DIESEL
+SOLAS

# INSTRUMENTPANEL (STANDARD)
# TILL -->2010

06084084-0

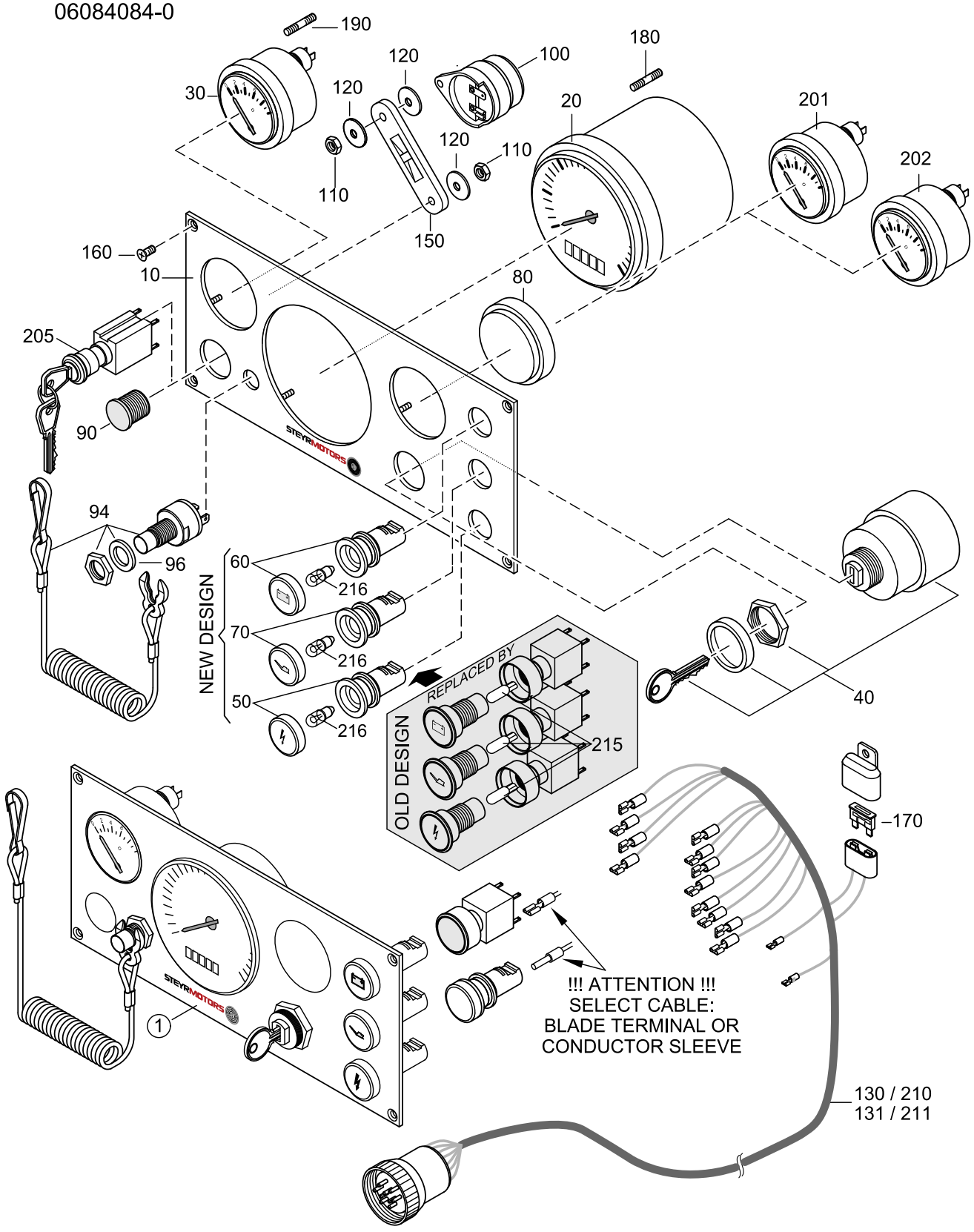

## INSTRUMENTPANEL (STANDARD)
## TILL -->2010

114 MARINE
TURBO DIESEL
+SOLAS

06084084-0

| Pos. | Part.-No. | Qty | Designation | Step |
|---|---|---|---|---|
| 1 | Z002635-0 | 1 | SPARE PANEL ASSY. (ALTERN. ISKRA) | .2 |
| 10 | 2178831-3 | 1 | INSTRUMENT PANEL | ..3 |
| 20 | 2178756-3 | 1 | REVOLU. & OPERA. HOUR COUNTER | ..3 |
| 30 | 2178229-2 | 1 | COOLANT TEMPERATURE GAUGE | ..3 |
| 40 | 2178761-4 | 1 | GLOW-START SWITCH ASSY.(SPARE) | ..3 |
| 50 | 2179290-0 | 1 | WARNING-LIGHT CHECK ENGI. ASSY | ..3 |
| 60 | 2179291-0 | 1 | WARNING-LIGHT BATTERY CHARGE ASSY. 12V | ..3 |
| 70 | 2179292-0 | 1 | WARNING-LIGHT ENGINE-OIL ASSY. | ..3 |
| 80 | 2178759-2 | 1 | BLIND COVER | ..3 |
| 90 | 2179320-0 | 1 | BLIND PLUG, BLACK | ..3 |
| 94 | Z002073-0 | 1 | EMERGENCY CUTOFF SWITCH KIT | ..3 |
| 96 | 2176170-0 | 1 | O-RING 15 x 2 | ..3 |
| 100 | 2178760-1 | 1 | HORN AUDIBLE WARNING | ..3 |
| 110 | 3870051-0 | 2 | HEX.NUT ISO 4032-M4-A2-70 | ..3 |
| 120 | 3930072-0 | 2 | WASHER LARGE SERIES DIN 9021-4.3-A2 | ..3 |
| 130 | 2206290-1 | 1 | CABLE ASSY. INSTRUMENT 7m (BLADE TERMINAL) | ..3 |
| 131 | Z002669-0 | 1 | CABLE ASSY. INSTRUMENT 7m (CONDUCTOR SLEEVE) SPARE PART | ..3 |
| 160 | 9000192-0 | 4 | CR.REC.COUNT.SUNK HD.TPG.SCR. ISO 7050-ST3.5x16 | ..3 |
| 170 | 11345 | 1 | FUSE 10A, RED | ..3 |
| 190 | 2206167-1 | 1 | STUD | ..3 |
| 201 | 2178227-2 | 1 | OIL PRESSURE GAUGE 10 BAR (ACCESSORY) | .2 |
| 202 | 2178231-1 | 1 | VOLTMETER 12V (ACCESSORY) | .2 |
| 205 | 2178761-2 | 1 | KEY-SWITCH CONSTANT REVOLUTION (ACCESSORY) | .2 |
| 210 | 2206290-4 | 1 | CABLE ASSY. INSTRUMENT 1,5m (BLADE TERMINAL) | .2 |
| 211 | Z002670-0 | 1 | CABLE ASSY. INSTRUMENT 1.5m (CONDUCTOR SLEEVE) SPARE PART | .2 |
| 215 | 2178242-4 | 3 | GLASS SOCKET LAMP 12V 2W x 4,6D (OLD DESIGN) | .2 |
| 216 | 2179162-0 | 3 | MINIATUR LAMP 12V/2W 10x28 (NEW DESIGN) | .2 |

114 MARINE
TURBO DIESEL
+SOLAS

# INSTRUMENTPANEL (STANDARD)
# FROM 2010-->

06072184-1

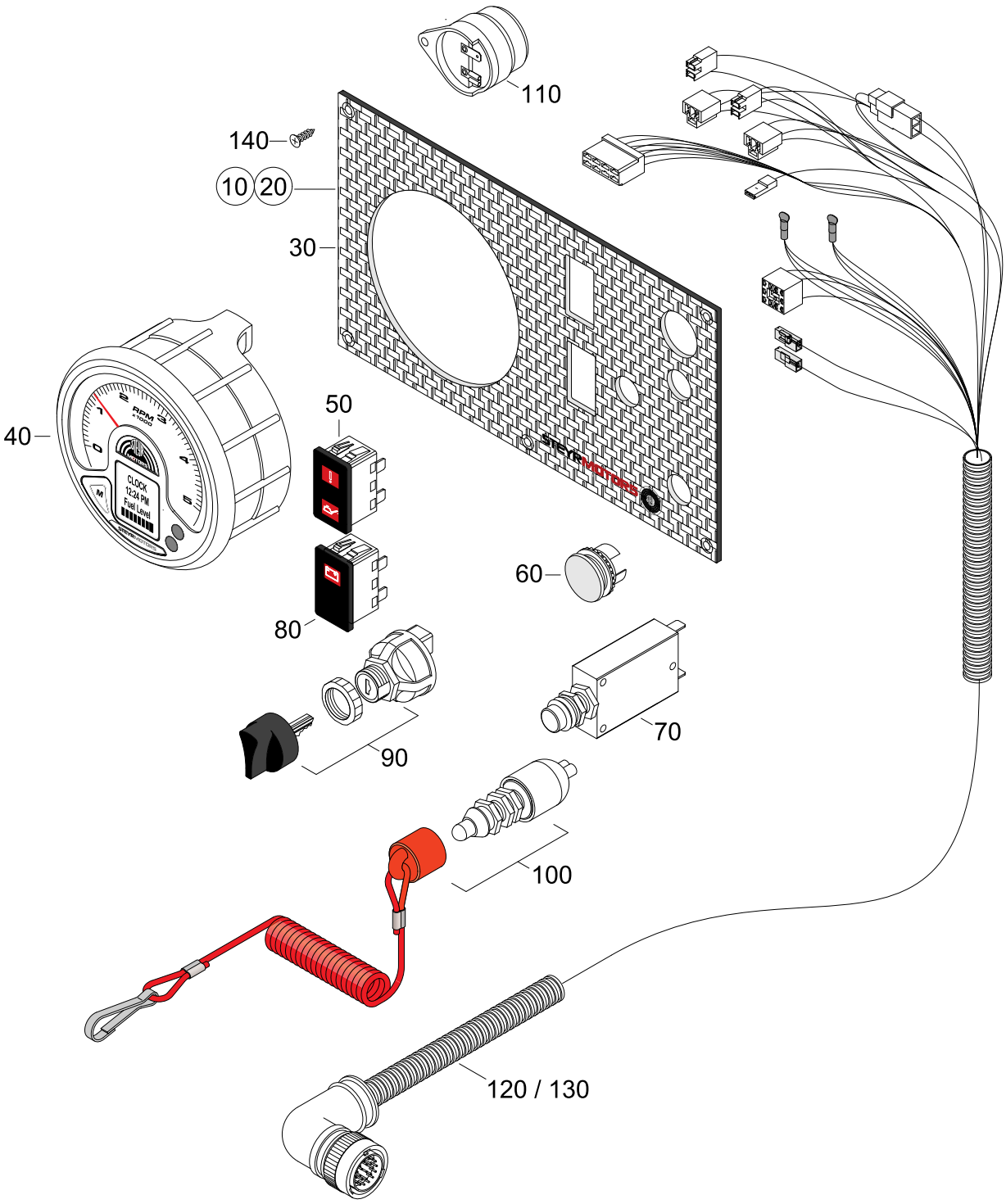

## INSTRUMENTPANEL (STANDARD)
## FROM 2010-->

114 MARINE
TURBO DIESEL
+SOLAS

06072184-1

| Pos. | Part.-No. | Qty | Designation | Step |
|---|---|---|---|---|
| 10 | 2179963-0 | 1 | INSTR. PANEL ASSY. (LED) 12V 7m | .2 |
| 20 | 2179965-0 | 1 | INSTR.PANEL ASSY. (LED) 12V 1,5m | .2 |
| 30 | 2179981-0 | 1 | FRONT PLATE, INSTRUMENT PANEL - STANDARD | ..3 |
| 40 | 2179971-0 | 1 | REVOLUTION COUNTER | ..3 |
| 50 | Z002196-0 | 1 | WARNING LED, CHECK ENGINE & OIL PRESSURE | ..3 |
| 60 | 2179320-0 | 1 | BLIND PLUG, BLACK | ..3 |
| 70 | Z002180-0 | 1 | THERMO PROTECTION SWITCH ASSY. | ..3 |
| 80 | Z002197-0 | 1 | WARNING LED, BATTERY CHARGE | ..3 |
| 90 | 2179975-0 | 1 | GLOW-START SWITCH | ..3 |
| 100 | 2179978-0 | 1 | EMERGENCY CUTOFF SWITCH | ..3 |
| 110 | 2178760-1 | 1 | HORN AUDIBLE WARNING | ..3 |
| 120 | 2180073-0 | 1 | CABLE ASSY. INSTRUMENT 7m | ..3 |
| 130 | 2180075-0 | 1 | CABLE ASSY. INSTRUMENT 1,5m | ..3 |
| 140 | 9000817-0 | 6 | CR.REC.COUNT.SUNK HD.TPG.SCR. 3.5x16 | ..3 |

114 MARINE TURBO DIESEL +SOLAS

# INSTRUMENTPANEL SOLAS (STANDARD) TILL -->2010

06094084-0

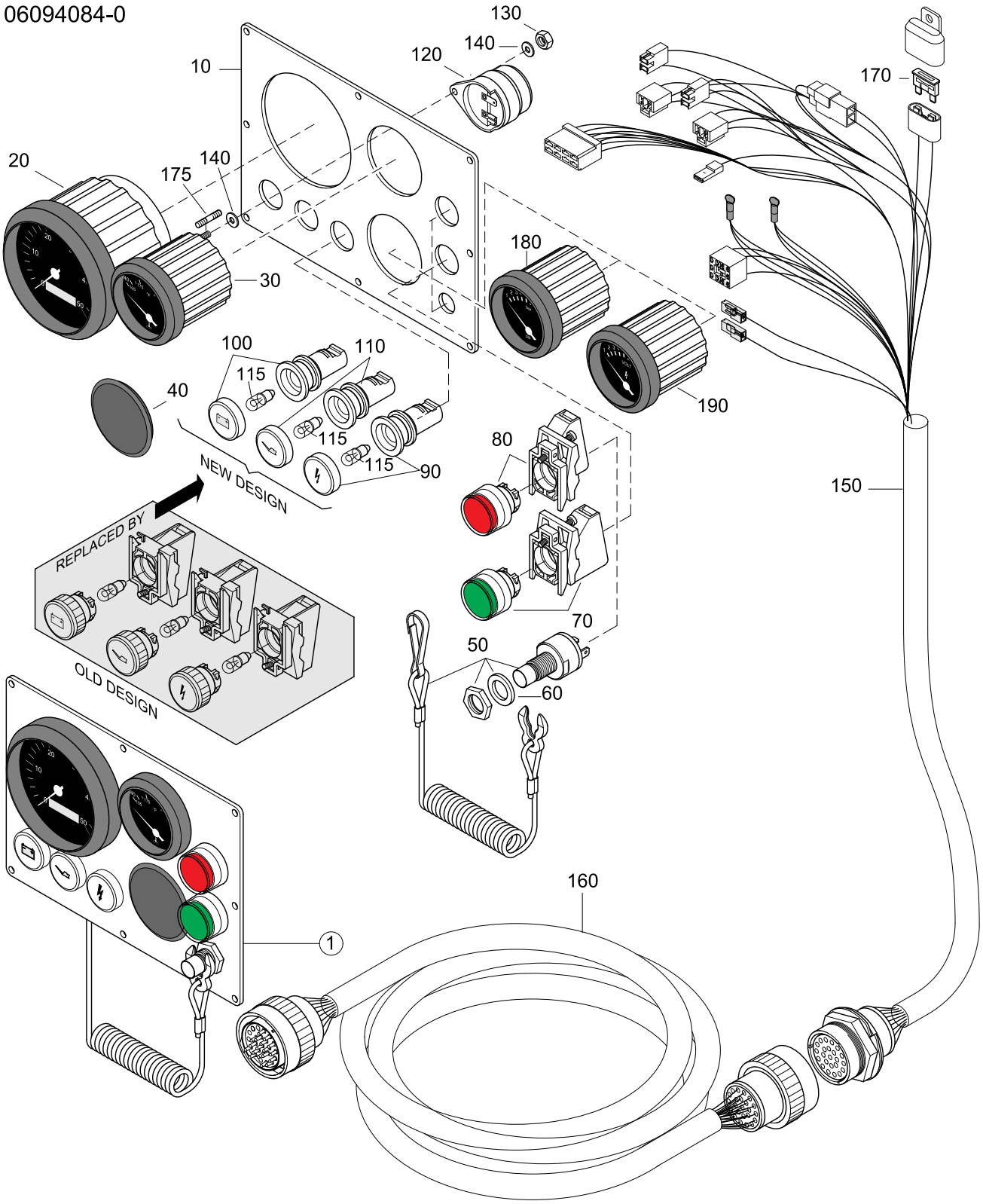

## INSTRUMENTPANEL SOLAS (STANDARD)
## TILL -->2010

114 MARINE
TURBO DIESEL
+SOLAS

06094084-0

| Pos. | Part.-No. | Qty | Designation | Step |
|---|---|---|---|---|
| 1 | Z002122-0 | 1 | SPARE PANEL ASSY. SOLAS (ALTERN. ISKRA) | .2 |
| 10 | 2178831-4 | 1 | INSTRUMENT PANEL SOLAS | ..3 |
| 20 | 2178756-3 | 1 | REVOLU. & OPERA. HOUR COUNTER | ..3 |
| 30 | 2178229-2 | 1 | COOLANT TEMPERATURE GAUGE | ..3 |
| 40 | 2178759-2 | 1 | BLIND COVER | ..3 |
| 50 | Z002073-0 | 1 | EMERGENCY CUTOFF SWITCH KIT | ..3 |
| 60 | 2176170-0 | 1 | O-RING 15 x 2 | ..3 |
| 70 | 2179294-0 | 1 | SWITCH ASSY. START GREEN | ..3 |
| 80 | 2179293-5 | 1 | IGNITION SWITCH RED ASSY. | ..3 |
| 90 | 2179290-0 | 1 | WARNING-LIGHT CHECK ENGI. ASSY | ..3 |
| 100 | 2179291-0 | 1 | WARNING-LIGHT BATTERY CHARGE ASSY. 12V | ..3 |
| 110 | 2179292-0 | 1 | WARNING-LIGHT ENGINE-OIL ASSY. | ..3 |
| 115 | 2179262-0 | 3 | INVERTER/CHARGER 2500W/12VDC 130A/220V/50Hz | ..3 |
| 120 | 2178760-1 | 1 | HORN AUDIBLE WARNING | ..3 |
| 130 | 3870051-0 | 2 | HEX.NUT ISO 4032-M4-A2-70 | ..3 |
| 140 | 3930072-0 | 2 | WASHER LARGE SERIES DIN 9021-4.3-A2 | ..3 |
| 150 | Z002671-0 | 1 | CABLE ASSY. INSTR. 1.5m SOLAS (SPARE PART) | ..3 |
| 160 | 2206291-1 | 1 | INTERMEDIATE CABLE 5m SAME 23-WAY CON. | ..3 |
| 170 | 11345 | 1 | FUSE 10A, RED | ..3 |
| 175 | 2206167-1 | 1 | STUD | ..3 |
| 180 | 2178227-2 | 1 | OIL PRESSURE GAUGE 10 BAR (ACCESSORY) | .2 |
| 190 | 2178231-1 | 1 | VOLTMETER 12V (ACCESSORY) | .2 |

114 MARINE
TURBO DIESEL
+SOLAS

# INSTRUMENTPANEL SOLAS (STANDARD) FROM 2010-->

06092184-1

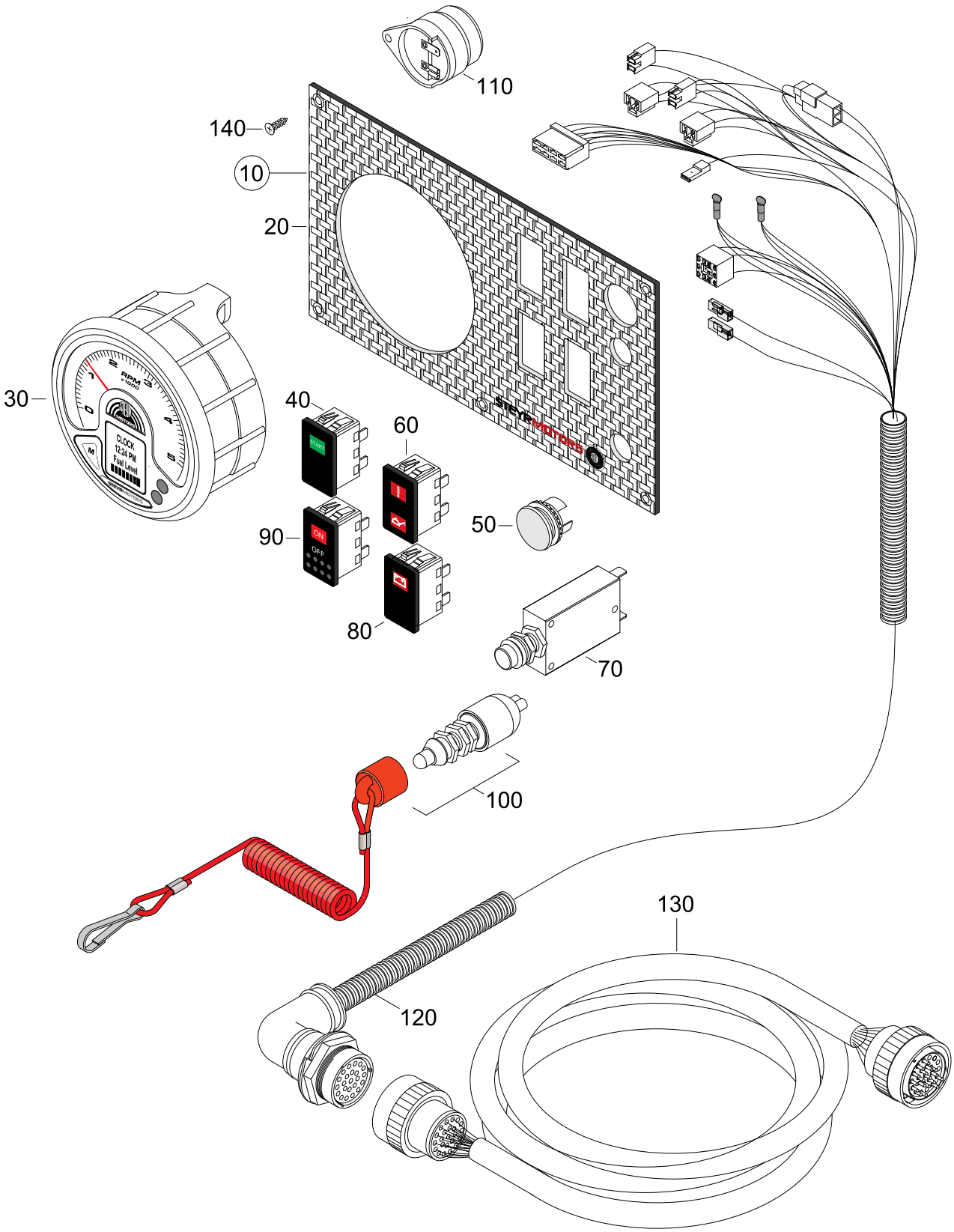

## INSTRUMENTPANEL SOLAS (STANDARD)
## FROM 2010-->

114 MARINE
TURBO DIESEL
+SOLAS

06092184-1

| Pos. | Part.-No. | Qty | Designation | Step |
|---|---|---|---|---|
| 10 | 2179964-0 | 1 | INSTRUMENT PANEL ASSY. (LED) 12V SOLAS | .2 |
| 20 | 2179982-0 | 1 | FRONT PLATE, INSTRUMENT PANEL - SOLAS | ..3 |
| 30 | 2179971-0 | 1 | REVOLUTION COUNTER | ..3 |
| 40 | Z002198-0 | 1 | START SWITCH, GREEN | ..3 |
| 50 | 2179320-0 | 1 | BLIND PLUG, BLACK | ..3 |
| 60 | Z002196-0 | 1 | WARNING LED, CHECK ENGINE & OIL PRESSURE | ..3 |
| 70 | Z002180-0 | 1 | THERMO PROTECTION SWITCH ASSY. | ..3 |
| 80 | Z002197-0 | 1 | WARNING LED, BATTERY CHARGE | ..3 |
| 90 | Z002199-0 | 1 | IGNITION SWITCH | ..3 |
| 100 | 2179978-0 | 1 | EMERGENCY CUTOFF SWITCH | ..3 |
| 110 | 2178760-1 | 1 | HORN AUDIBLE WARNING | ..3 |
| 120 | 2180074-0 | 1 | CABLE ASSY. INSTRUMENT | ..3 |
| 130 | 2206291-1 | 1 | INTERMEDIATE CABLE 5m | ..3 |
| 140 | 9000817-0 | 6 | CR.REC.COUNT.SUNK HD.TPG.SCR. 3.5x16 | ..3 |

114 MARINE
TURBO DIESEL
+SOLAS

# DISPLAY (ACCESSORY)

06106184-2

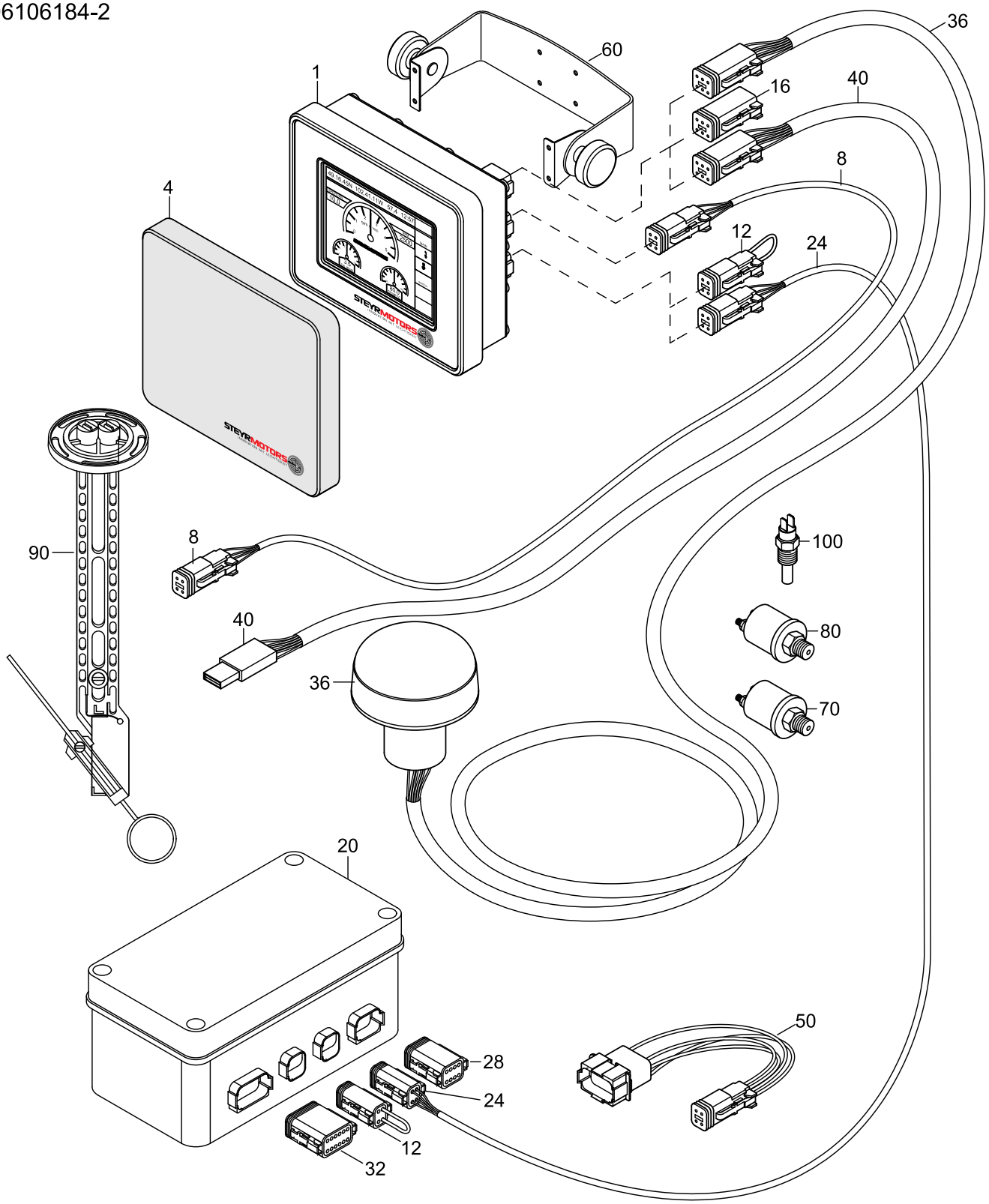

# DISPLAY (ACCESSORY)

114 MARINE
TURBO DIESEL
+SOLAS

06106184-2

| Pos. | Part.-No. | Qty | Designation | Step |
|---|---|---|---|---|
| 1 | Z002132-0 | 1 | STEYR CONTROL CENTER (SPARE PART) | .2 |
| 4 | 2179637-0 | 1 | PROTECTIVE COVERING - SCC | ..3 |
| 8 | 2206313-0 | 1 | CONNECTING CABLE SCC->PANEL (4-POLE) | ..3 |
| 12 | 2206314-0 | 1 | CONNECTOR CAN-TERMINATOR (4-POLE) | ..3 |
| 16 | 2179638-0 | 1 | DUMMY PLUG 6-POLE | ..3 |
| 20 | 2179156-2 | 1 | I/O BOX | .2 |
| 24 | 2206315-0 | 1 | CONNECTING CABLE I/O BOX -> SCC (4-POLE) | ..3 |
| 28 | 2179639-0 | 1 | DUMMY PLUG 8-POLE | ..3 |
| 32 | 2179640-0 | 1 | DUMMY PLUG 12-POLE | ..3 |
| 36 | 2179641-0 | 1 | GPS-SENSOR ASSY | .2 |
| 40 | 2179607-0 | 1 | SCC CONFIGURATIONS CABLE 1,8m USB 2.0 | .2 |
| 50 | 2179636-0 | 1 | ADAPTER CABLE SPORTLINE TO SCC (8-POLE TO 4-POLE) | .2 |
| 60 | Z002177-0 | 1 | KIT MOUNTING BRACHETS F. SCC | .2 |
| 70 | Z002640-0 | 1 | OIL PRESSURE SENSOR 2-POLE (ACCESSORY) | .2 |
| 80 | 2179519-0 | 1 | OIL PRESSURE SENSOR ZF-GEARBOX | .2 |
| 90 | 2179331-0 | 1 | FUEL TANK SENSOR | .2 |
| 100 | 2179520-0 | 1 | TEMPERATURE SENSOR, GEARBOX OIL | .2 |

STEYRMOTORS
INNOVATION WITH LIGHTNESS

114 MARINE
TURBO DIESEL
+SOLAS

# SWITCH PANEL FOR DISPLAY
# TILL -->2010

06114084-0

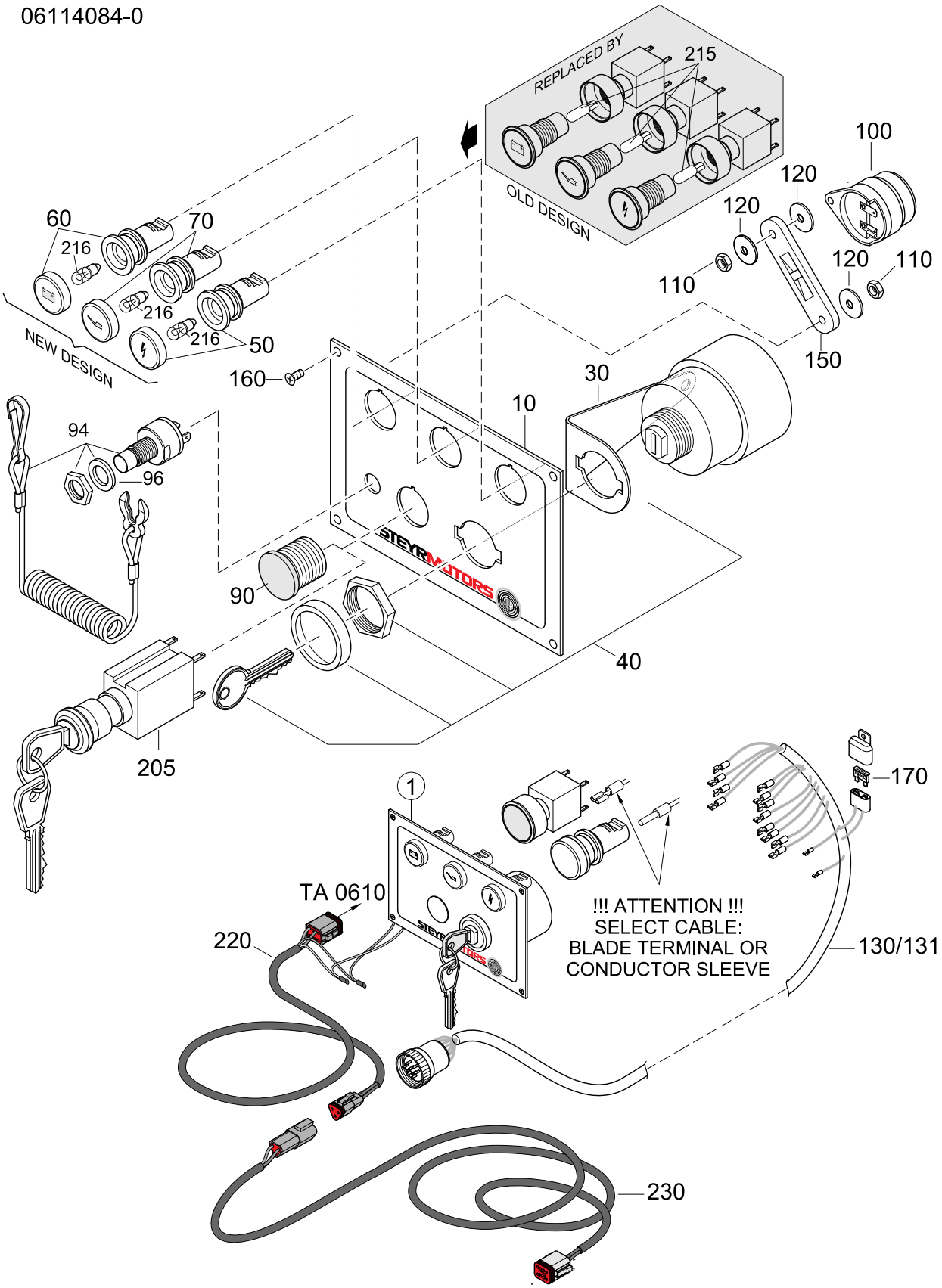

# SWITCH PANEL FOR DISPLAY
# TILL -->2010

114 MARINE
TURBO DIESEL
+SOLAS

06114084-0

| Pos. | Part.-No. | Qty | Designation | Step |
|---|---|---|---|---|
| 1 | Z002123-0 | 1 | SWITCH PANEL ASSY. (ALTERN. ISKRA) | .2 |
| 10 | 2179134-1 | 1 | INSTRUMENT PANEL | ..3 |
| 30 | 2179173-0 | 1 | SHACKLE STRAIN RELIEF, PANEL (NEW DESIGN) | ..3 |
| 40 | 2178761-4 | 1 | GLOW-START SWITCH ASSY.(SPARE) | ..3 |
| 50 | 2179290-0 | 1 | WARNING-LIGHT CHECK ENGI. ASSY | ..3 |
| 60 | 2179291-0 | 1 | WARNING-LIGHT BATTERY CHARGE ASSY. 12V | ..3 |
| 70 | 2179292-0 | 1 | WARNING-LIGHT ENGINE-OIL ASSY. | ..3 |
| 90 | 2179320-0 | 1 | BLIND PLUG, BLACK | ..3 |
| 94 | Z002073-0 | 1 | EMERGENCY CUTOFF SWITCH KIT | ..3 |
| 96 | 2176170-0 | 1 | O-RING 15 x 2 | ..3 |
| 100 | 2178760-1 | 1 | HORN AUDIBLE WARNING | ..3 |
| 110 | 3870051-0 | 4 | HEX.NUT ISO 4032-M4-A2-70 | ..3 |
| 120 | 3930072-0 | 6 | WASHER LARGE SERIES DIN 9021-4.3-A2 | ..3 |
| 130 | 2206290-1 | 1 | CABLE ASSY. INSTRUMENT 7m (BLADE TERMINAL) | ..3 |
| 131 | Z002669-0 | 1 | CABLE ASSY. INSTRUMENT 7m (CONDUCTOR SLEEVE) SPARE PART | ..3 |
| 150 | 2178870-1 | 1 | FIXTURE, CABLE TIE (OLD DESIGN) | ..3 |
| 160 | 9000192-0 | 4 | CR.REC.COUNT.SUNK HD.TPG.SCR. ISO 7050-ST3.5x16 | ..3 |
| 170 | 11345 | 1 | FUSE 10A, RED | ..3 |
| 205 | 2178761-2 | 1 | KEY-SWITCH CONSTANT REVOLUTION (ACCESSORY) | ..3 |
| 215 | 2178242-4 | 3 | GLASS SOCKET LAMP 12V 2W x 4,6D (OLD DESIGN) | ..3 |
| 216 | 2179162-0 | 3 | MINIATUR LAMP 12V/2W 10x28 (NEW DESIGN) | ..3 |
| 220 | Z002131-0 | 1 | CONNECTING CABLE-CANBUS(SPARE) WITH CONNECTOR | .2 |
| 230 | 2179150-1 | 1 | INTERMEDIATE CABLE - CANBUS WITH CONNECTOR | .2 |

STEYRMOTORS
INNOVATION WITH LIGHTNESS

114 MARINE
TURBO DIESEL
+SOLAS

# SWITCH PANEL FOR DISPLAY FROM 2010-->

06112184-1

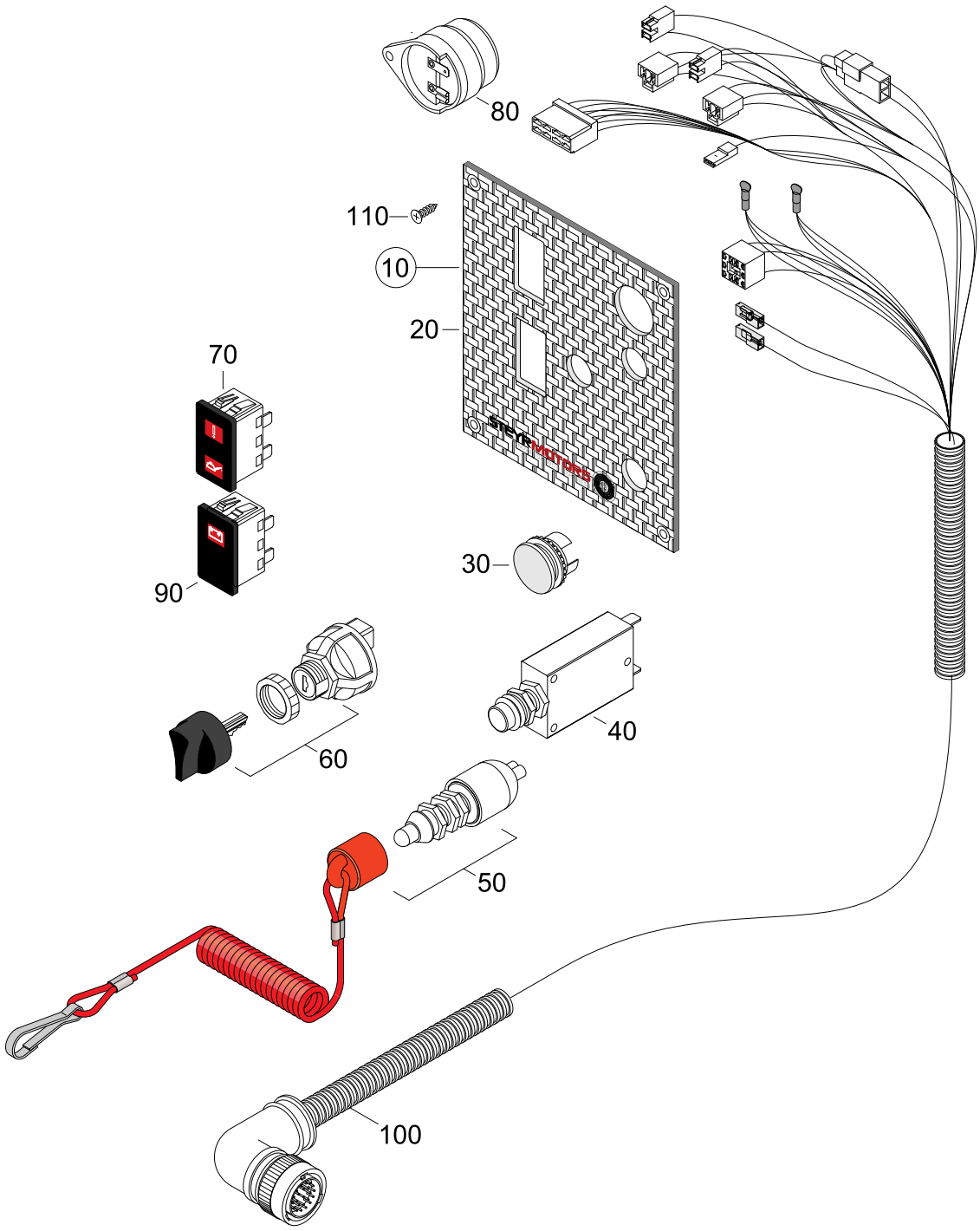

## SWITCH PANEL FOR DISPLAY
## FROM 2010-->

114 MARINE
TURBO DIESEL
+SOLAS

06112184-1

| Pos. | Part.-No. | Qty | Designation | Step |
|---|---|---|---|---|
| 10 | 2179966-0 | 1 | SWITCH PANEL ASSY. (LED) (FOR SCC-DISPLAY) | .2 |
| 20 | 2179983-0 | 1 | FRONT PLATE, SWITCH PANEL | ..3 |
| 30 | 2179320-0 | 1 | BLIND PLUG, BLACK | ..3 |
| 40 | Z002180-0 | 1 | THERMO PROTECTION SWITCH ASSY. | ..3 |
| 50 | 2179978-0 | 1 | EMERGENCY CUTOFF SWITCH | ..3 |
| 60 | 2179975-0 | 1 | GLOW-START SWITCH | ..3 |
| 70 | Z002196-0 | 1 | WARNING LED, CHECK ENGINE & OIL PRESSURE | ..3 |
| 80 | 2178760-1 | 1 | HORN AUDIBLE WARNING | ..3 |
| 90 | Z002197-0 | 1 | WARNING LED, BATTERY CHARGE | ..3 |
| 100 | 2180076-0 | 1 | CABLE ASSY. SWITCH PANEL | ..3 |
| 110 | 9000817-0 | 4 | CR.REC.COUNT.SUNK HD.TPG.SCR. 3.5x16 | ..3 |

STEYRMOTORS
INNOVATION WITH LIGHTNESS

114 MARINE
TURBO DIESEL
+SOLAS

# PUSH BUTTON PANEL SOLAS FOR DISPLAY TILL -->2010

06124084-0

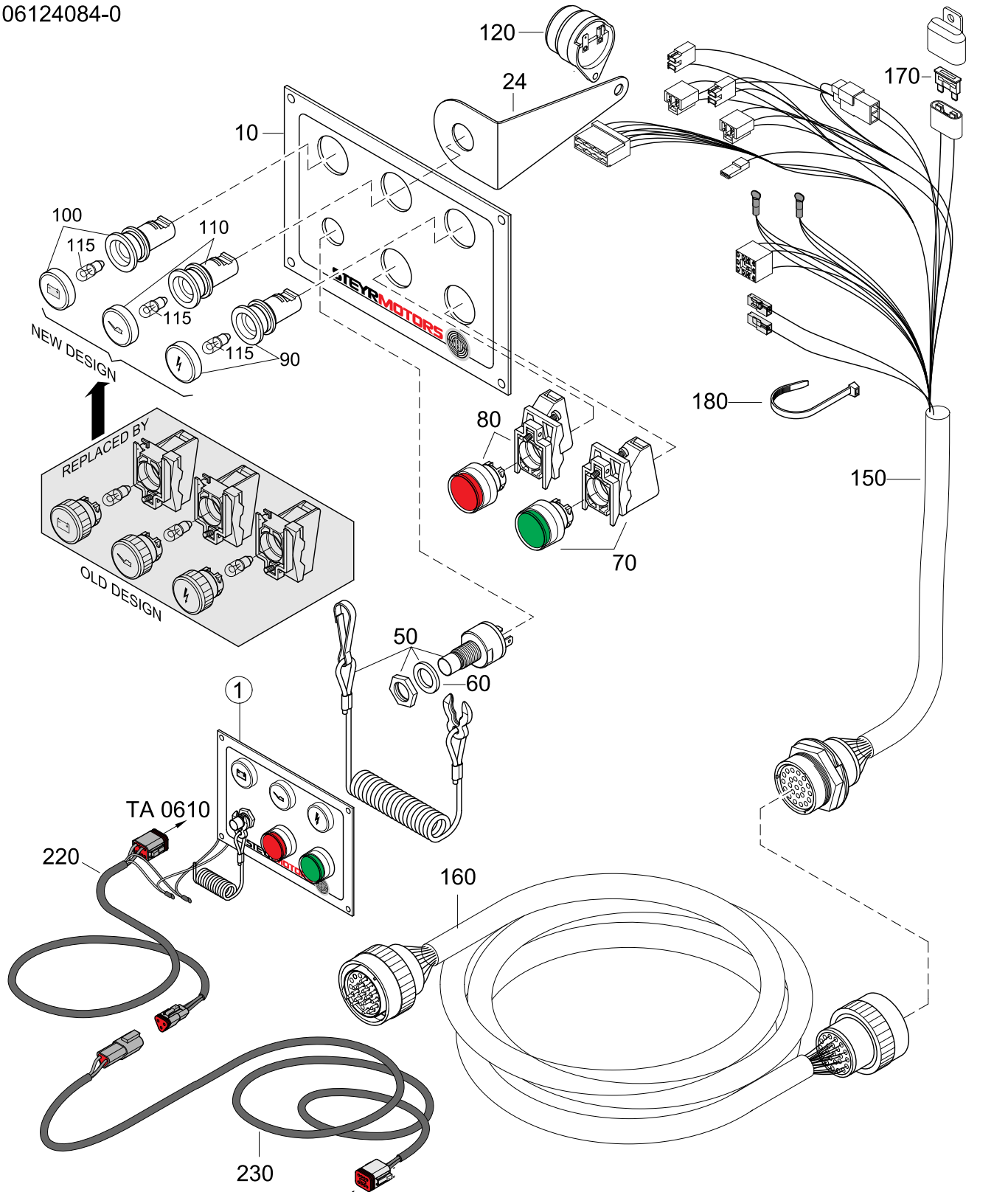

# PUSH BUTTON PANEL SOLAS FOR DISPLAY TILL -->2010

114 MARINE
TURBO DIESEL
+SOLAS

06124084-0

| Pos. | Part.-No. | Qty | Designation | Step |
|---|---|---|---|---|
| 1 | Z002124-0 | 1 | PUSH BUTTON PANEL ASSY. SOLAS (ALTERN. ISKRA) | .2 |
| 10 | 2179135-1 | 1 | BASE PLATE INSTRUMENT PANEL SOLAS | ..3 |
| 24 | 2179173-1 | 1 | SHACKLE STRAIN RELIEF, PANEL | ..3 |
| 50 | Z002073-0 | 1 | EMERGENCY CUTOFF SWITCH KIT | ..3 |
| 60 | 2176170-0 | 1 | O-RING 15 x 2 | ..3 |
| 70 | 2179294-0 | 1 | SWITCH ASSY. START GREEN | ..3 |
| 80 | 2179293-0 | 1 | IGNITION SWITCH RED ASSY. | ..3 |
| 90 | 2179290-0 | 1 | WARNING-LIGHT CHECK ENGI. ASSY | ..3 |
| 100 | 2179291-0 | 1 | WARNING-LIGHT BATTERY CHARGE ASSY. 12V | ..3 |
| 110 | 2179292-0 | 1 | WARNING-LIGHT ENGINE-OIL ASSY. | ..3 |
| 115 | 2179162-0 | 3 | MINIATUR LAMP 12V/2W 10x28 | ..3 |
| 120 | 2178760-1 | 1 | HORN AUDIBLE WARNING | ..3 |
| 130 | 3870051-0 | 2 | HEX.NUT ISO 4032-M4-A2-70 | ..3 |
| 140 | 3930072-0 | 2 | WASHER LARGE SERIES DIN 9021-4.3-A2 | ..3 |
| 150 | Z002671-0 | 1 | CABLE ASSY. INSTR. 1.5m SOLAS (SPARE PART) | ..3 |
| 160 | 2206291-1 | 1 | INTERMEDIATE CABLE 5m SAME 23-WAY CON. | ..3 |
| 170 | 11345 | 1 | FUSE 10A, RED | ..3 |
| 180 | 3171035-0 | 6 | TIE STRAP N 05199-B4,8x180 | ..3 |
| 220 | Z002131-0 | 1 | CONNECTING CABLE-CANBUS(SPARE) WITH CONNECTOR | .2 |
| 230 | 2179150-1 | 1 | INTERMEDIATE CABLE - CANBUS WITH CONNECTOR | .2 |

STEYRMOTORS
INNOVATION WITH LIGHTNESS

114 MARINE
TURBO DIESEL
+SOLAS

# PUSH BUTTON PANEL SOLAS FOR DISPLAY FROM 2010-->

06122184-1

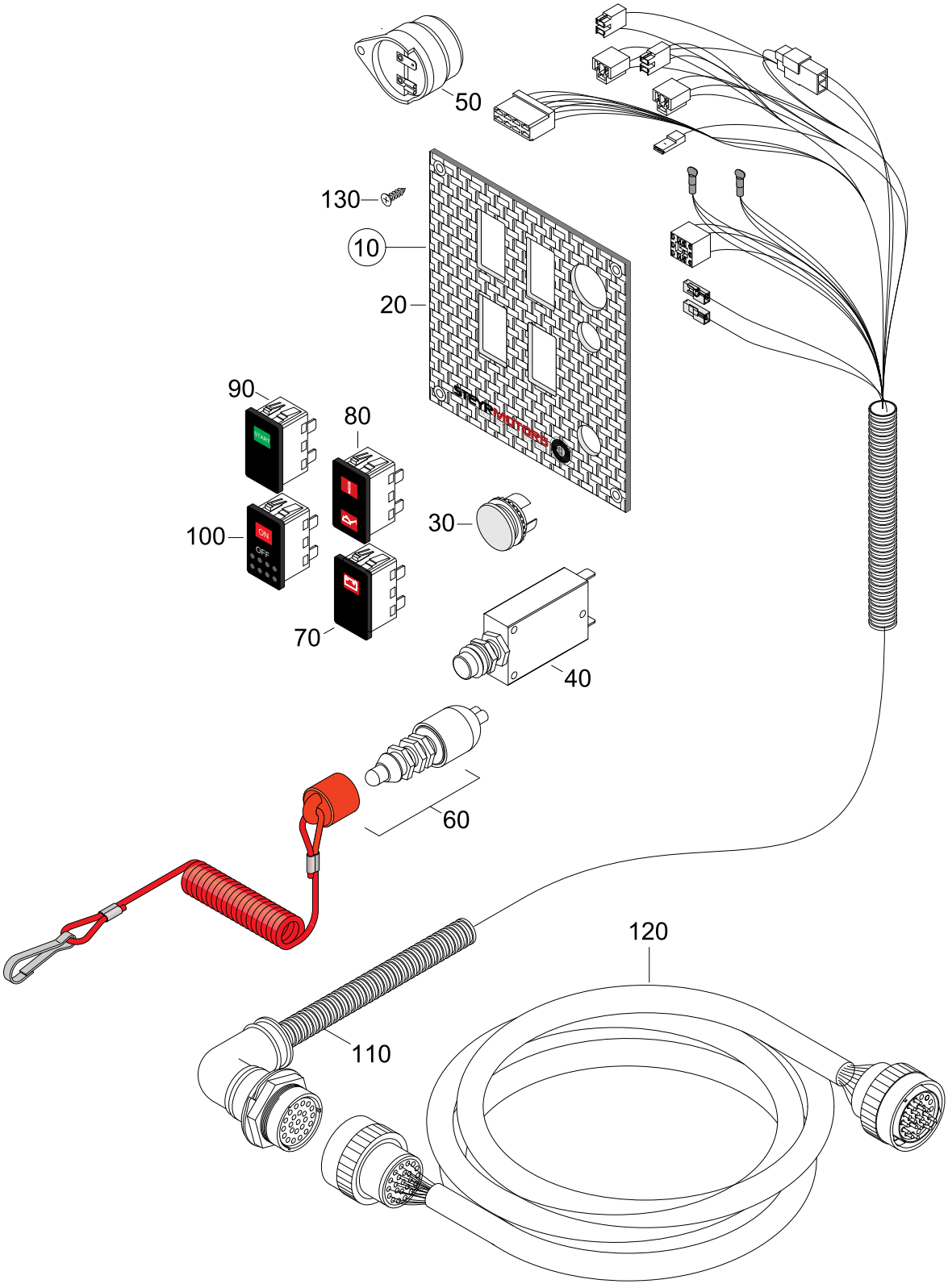

# PUSH BUTTON PANEL SOLAS FOR DISPLAY FROM 2010-->

114 MARINE
TURBO DIESEL
+SOLAS

06122184-1

| Pos. | Part.-No. | Qty | Designation | Step |
|---|---|---|---|---|
| 10 | 2179967-0 | 1 | PUSH BUTTON PANEL (LED) SOLAS (FOR SCC-DISPLAY) | .2 |
| 20 | 2179984-0 | 1 | FRONT PLATE, PUSH BUTTON PANEL | ..3 |
| 30 | 2179320-0 | 1 | BLIND PLUG, BLACK | ..3 |
| 40 | Z002180-0 | 1 | THERMO PROTECTION SWITCH ASSY. | ..3 |
| 50 | 2178760-1 | 1 | HORN AUDIBLE WARNING | ..3 |
| 60 | 2179978-0 | 1 | EMERGENCY CUTOFF SWITCH | ..3 |
| 70 | Z002197-0 | 1 | WARNING LED, BATTERY CHARGE | ..3 |
| 80 | Z002196-0 | 1 | WARNING LED, CHECK ENGINE & OIL PRESSURE | ..3 |
| 90 | Z002198-0 | 1 | START SWITCH, GREEN | ..3 |
| 100 | Z002199-0 | 1 | IGNITION SWITCH | ..3 |
| 110 | 2180077-0 | 1 | CABLE ASSY.PUSH-BUTTON PANEL | ..3 |
| 120 | 2206291-1 | 1 | INTERMEDIATE CABLE 5m | ..3 |
| 130 | 9000817-0 | 4 | CR.REC.COUNT.SUNK HD.TPG.SCR. 3.5x16 | ..3 |

STEYRMOTORS
INNOVATION WITH LIGHTNESS

114 MARINE
TURBO DIESEL
+SOLAS

# EXTENSION CABLE INSTRUMENTS (ACCESSORY)

06136184-0

**NOTE:** NOT COMPATIBLE WITH "SOLAS" INSTRUMENT PANEL

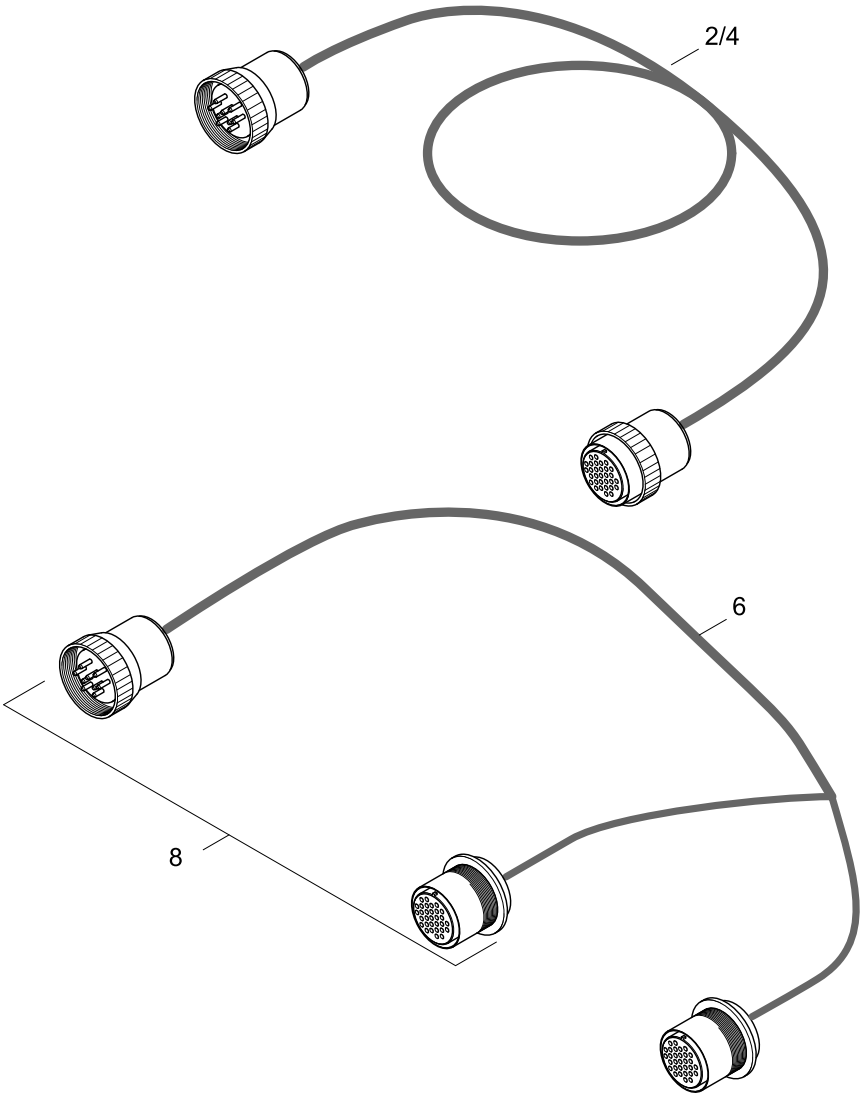

# EXTENSION CABLE INSTRUMENTS (ACCESSORY)

114 MARINE
TURBO DIESEL
+SOLAS

06136184-0

| Pos. | Part.-No. | Qty | Designation | Step |
|---|---|---|---|---|
| 2 | 2206291-0 | 1 | EXTENSION CABLE 6,3m 23-WAY CON. | .2 |
| 4 | 2206291-2 | 1 | EXTENSION CABLE 10m 23 WAY CON. | .2 |
| 6 | 2206292-0 | 1 | Y-JUNCTION CABLE 1m 23-WAY CON. | .2 |
| 8 | Z002410-0 | 1 | CABLE-PLUG PAIR COMPL. 23-POLE | .2 |

**NOTE:** **NOT COMPATIBLE WITH "SOLAS" INSTRUMENT PANEL**

07004034-0

**ZF 25, 25A**

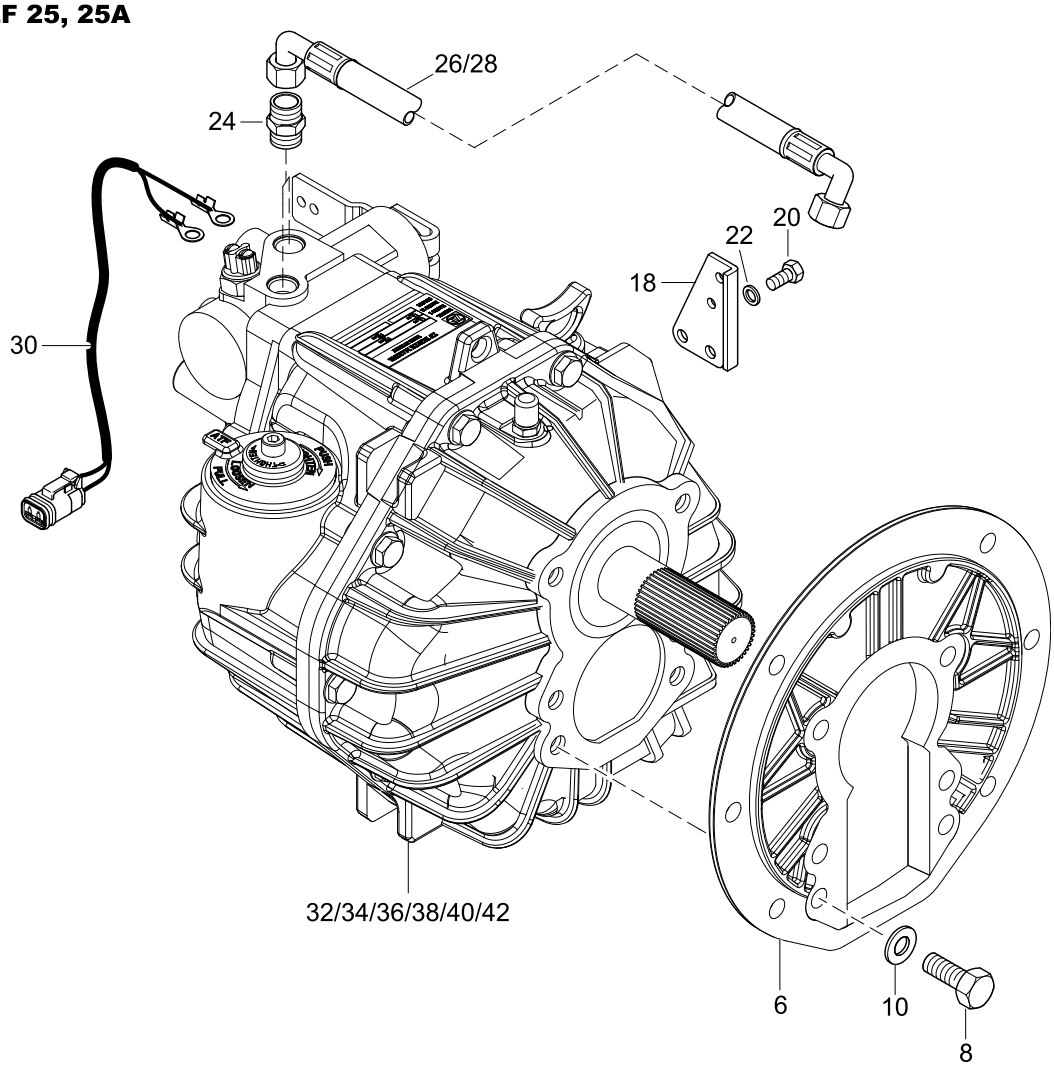

## TRANSMISS., MOUNTING BRACKETS, PIPES

114 MARINE
TURBO DIESEL
+SOLAS

07004034-0

| Pos. | Part.-No. | Qty | Designation | Step |
|---|---|---|---|---|
| 6 | 2179105-0 | 1 | ADAPTOR FLANGE B/W - ZF 25 & 25A | .2 |
| 8 | 3802527-0 | 6 | HEX.HD.SCR. ISO 4017-M10x30-A4 | .2 |
| 10 | 3932025-0 | 6 | SPRING WASHER DIN 137-A10-FST-A3C | .2 |
| 18 | 2178711-9 | 1 | BRACKET SHIFT CABLE PAINTED | .2 |
| 20 | 3800224-0 | 2 | HEX.HD.SCR. ISO 4017-M8x20-A2-70 | .2 |
| 22 | 3930103-0 | 2 | WASHER DIN 125-8.4-140HV-A2 | .2 |
| 24 | Z011655-0 | 2 | THREADED SOCKET 3/8NPT-M18x1,5 | .2 |
| 26 | 2178731-0 | 1 | OIL HOSE L=690mm | .2 |
| 28 | 2178732-0 | 1 | OIL HOSE L=825mm | .2 |
| 30 | 2178745-1 | 1 | HARNESS GEAR-SWITCH | .2 |
| 32 | 2179009-6 | 1 | GEARBOX ASSY. ZF 25 A I=2.29 (PAINTED) | .2 |
| 34 | 2179009-5 | 1 | GEARBOX ASSY. ZF 25 A I=2.71 (PAINTED) | .2 |
| 36 | 2179009-7 | 1 | GEARBOX ASSY. ZF 25 A I=1.93 (PAINTED) | .2 |
| 38 | 2179009-8 | 1 | GEARBOX ASSY. ZF 25 A I=1.55 (PAINTED) | .2 |
| 40 | 2179106-5 | 1 | GEARBOX ASSY. ZF 25 I=1.97 (PAINTED) | .2 |
| 42 | 2179106-6 | 1 | GEARBOX ASSY. ZF 25 I=2.80 (PAINTED) | .2 |

STEYRMOTORS
INNOVATION WITH LIGHTNESS

114 MARINE
TURBO DIESEL
+SOLAS

# TRANSMISSION-SHAFT, PTO-SHAFT (ALU)

07016184-0

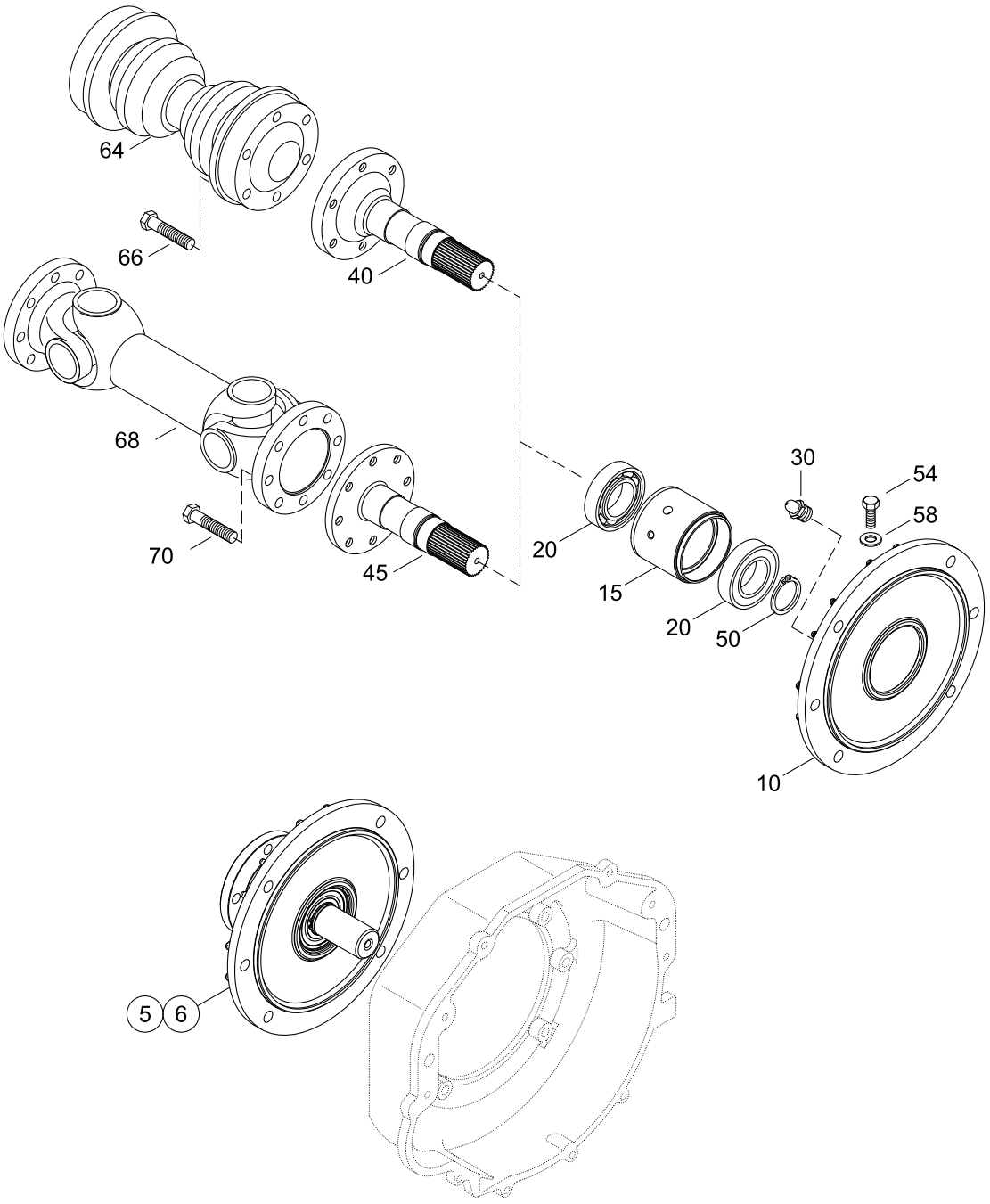


## ALU - HOUSING

# TRANSMISSION-SHAFT, PTO-SHAFT (ALU)

114 MARINE
TURBO DIESEL
+SOLAS

07016184-0

| Pos. | Part.-No. | Qty | Designation | Step |
|---|---|---|---|---|
| 5 | Z002098-0 | 1 | ADAPTER SHAFT ASSY. - 6-HOLES (PAINTED) | .2 |
| 6 | Z002099-0 | 1 | ADAPTER SHAFT ASSY. - 8-HOLES (PAINTED) | .2 |
| 10 | 2178815-1 | 1 | ADAPTER HOUSING JET (ALU CASTING) | ..3 |
| 15 | 2179328-0 | 1 | BEARING RETAINER | ..3 |
| 20 | 3311181-0 | 2 | DEEP GROOVE BALL BEARING DIN 625-RS1 | ..3 |
| 30 | 3963112-0 | 1 | LUBRICATING NIPPLE, CONE DIN 71412-AM8x1-A3F | ..3 |
| 40 | 2178814-0 | 1 | ADAPTER SHAFT ENGINE-PROPULSIO N (6-HOLES) | ..3 |
| 45 | 2178814-1 | 1 | ADAPTER SHAFT ENGINE-PROPULSIO N (8-HOLES) | ..3 |
| 50 | 3933251-0 | 1 | RETAINING RING SHAFT DIN 471-35x1,5 | ..3 |
| 54 | 3802442-0 | 2 | HEX.HD.SCR. ISO 4017-M8x40-8.8-A2C | ..3 |
| 58 | O125134-0 | 2 | WASHER LARGE | ..3 |
| 64 | 2178836-1 | 1 | PROPELLER SHAFT SHORT L=210 +/-24mm | .2 |
| 66 | 9000198-0 | 6 | HEX.HD.BOLT ISO 4014-M12x65-8.8-A3C | .2 |
| 68 | 2178836-0 | 1 | SLIDING SHAFT LONG L=354mm +70 | .2 |
| 70 | 3802515-0 | 8 | HEX.HD.SCR. ISO 4017-M10x20-8.8-A3C | .2 |

# TRANSMISSION GEAR SHIFT, CONTROLS

07054084-0

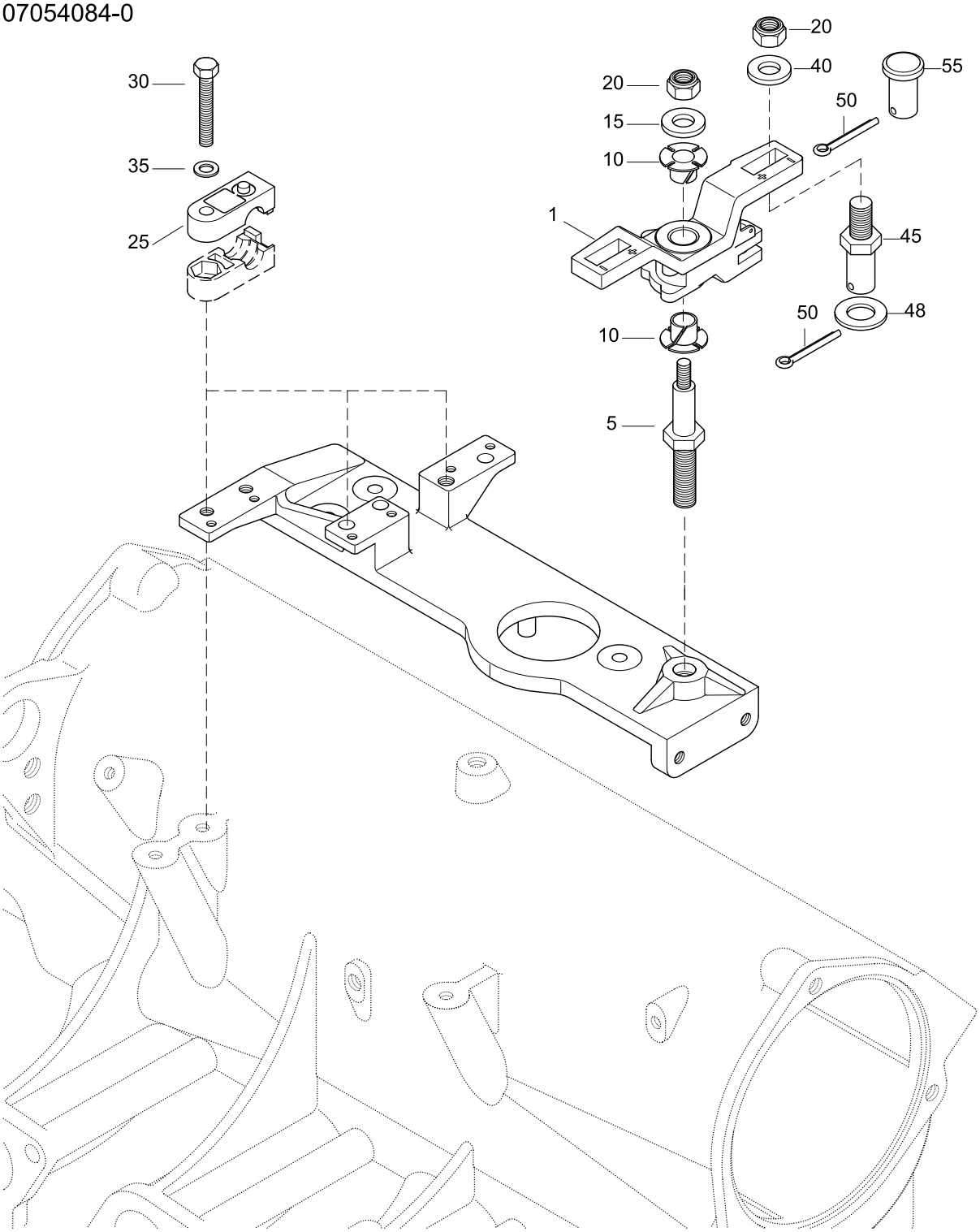

# TRANSMISSION GEAR SHIFT, CONTROLS

114 MARINE
TURBO DIESEL
+SOLAS

07054084-0

| Pos. | Part.-No. | Qty | Designation | Step |
|---|---|---|---|---|
| 1 | O915911-0 | 1 | CONTROL LEVER | .2 |
| 5 | O914626-0 | 1 | STUD CONTROL LEVER | .2 |
| 10 | O311015-0 | 2 | BUSHING | .2 |
| 15 | O328738-0 | 1 | PLAIN WASHER 1/4 | .2 |
| 20 | O121731-0 | 2 | NUT, LOCK 1/4-28 SST | .2 |
| 25 | O913795-0 | 4 | CLAMP BOWDEN WIRE | .2 |
| 30 | 3800222-0 | 2 | HEX.HD.SCR. ISO 4017-M6x35-A2-70 | .2 |
| 35 | 3930070-0 | 2 | WASHER DIN 125-6-140HV-A2 | .2 |
| 40 | O328703-0 | 1 | PLAIN WASHER 1/4x5/8 SST | .2 |
| 45 | O914727-0 | 1 | STUD BOLT | .2 |
| 48 | O304051-0 | 1 | WASHER, SHIFT CABLE | .2 |
| 50 | O305650-0 | 2 | COTTER PIN | .2 |
| 55 | O913791-0 | 1 | BOLT | .2 |

STEYRMOTORS
INNOVATION WITH LIGHTNESS

114 MARINE
TURBO DIESEL
+SOLAS

# HYDRAULIC PUMP

14084084-0

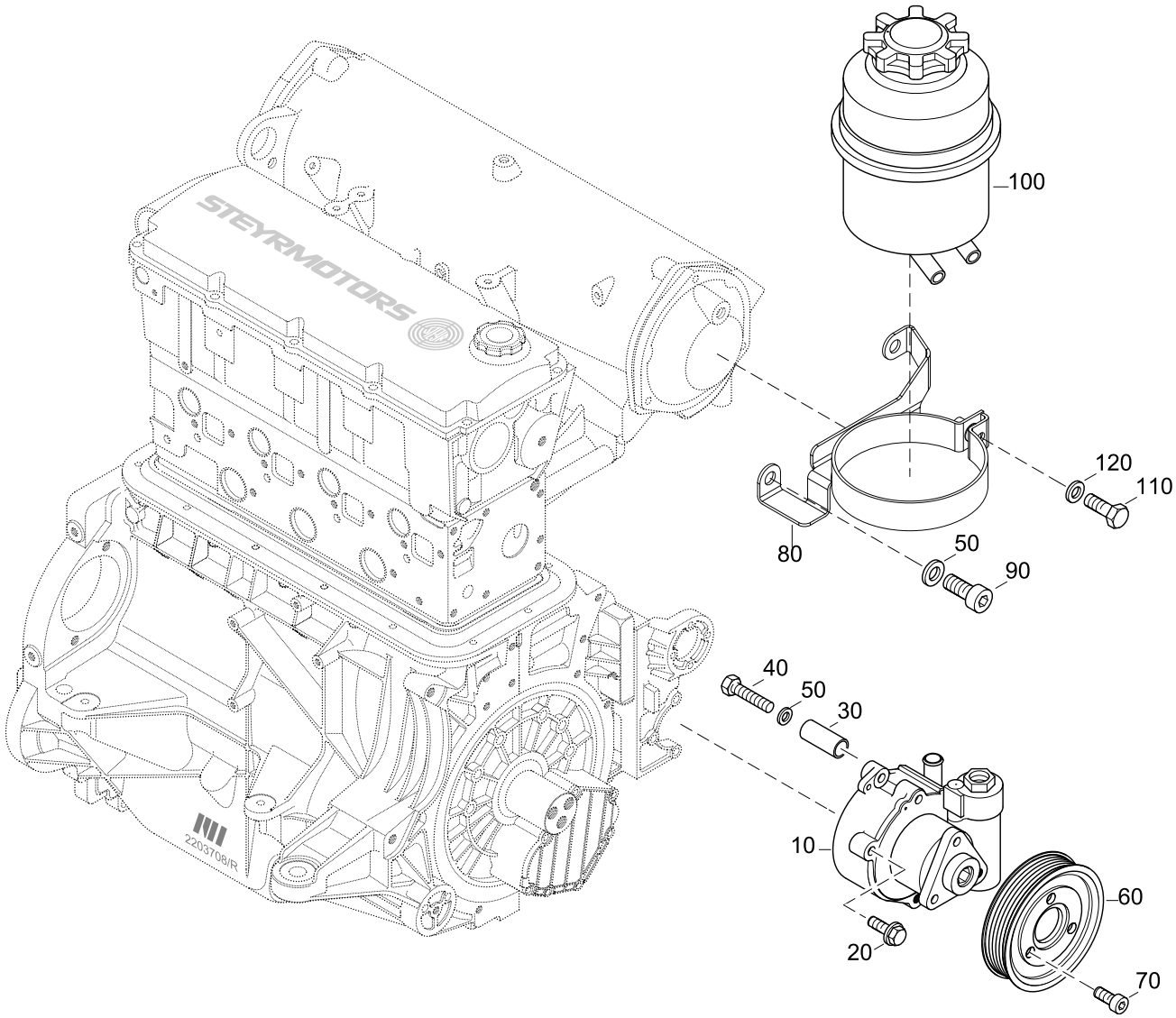

# HYDRAULIC PUMP

114 MARINE
TURBO DIESEL
+SOLAS

14084084-0

| Pos. | Part.-No. | Qty | Designation | Step |
|---|---|---|---|---|
| 10 | 2203712-9 | 1 | POWER STEERING PUMP (PAINTED) | .2 |
| 20 | 9000278-0 | 3 | HEX.FLANGE BOLT EN 1665-M8x35-8.8-A2C | .2 |
| 30 | 2203750-0 | 1 | CLAMPING SLEEVE PWR.STRG.PUMP | .2 |
| 40 | 3802442-0 | 1 | HEX.HD.SCR. ISO 4017-M8x40-8.8-A2C | .2 |
| 50 | 3930103-0 | 3 | WASHER DIN 125-8.4-140HV-A2 | .2 |
| 60 | 2203743-0 | 1 | PULLEY PWR.STRG.PUMP POLY-V | .2 |
| 70 | 3860152-0 | 3 | HEX.SOCK. HD.CAP SCR. DIN 912-M8x16-A2-70 | .2 |
| 80 | 2203759-0 | 1 | FASTENI. OILTANK PWR.STRG.PUMP 4 CYL. MARINE | .2 |
| 90 | 3862462-0 | 2 | HEX.SOCK. HD.CAP SCR. DIN 912-M8x60-8.8-A2C | .2 |
| 100 | 2178869-1 | 1 | OILTANK POWER STEERING PUMP | .2 |
| 110 | 3800223-0 | 1 | HEX.HD.SCR. ISO 4017-M6x60-A2-70 | .2 |
| 120 | 3930070-0 | 1 | WASHER DIN 125-6-140HV-A2 | .2 |
| 130 | Z002067-1 | 1 | POWER STEERING PUMP & LINES KIT 4 CYL. | .2 |

# HYDRAULIC PIPES

14094084-0

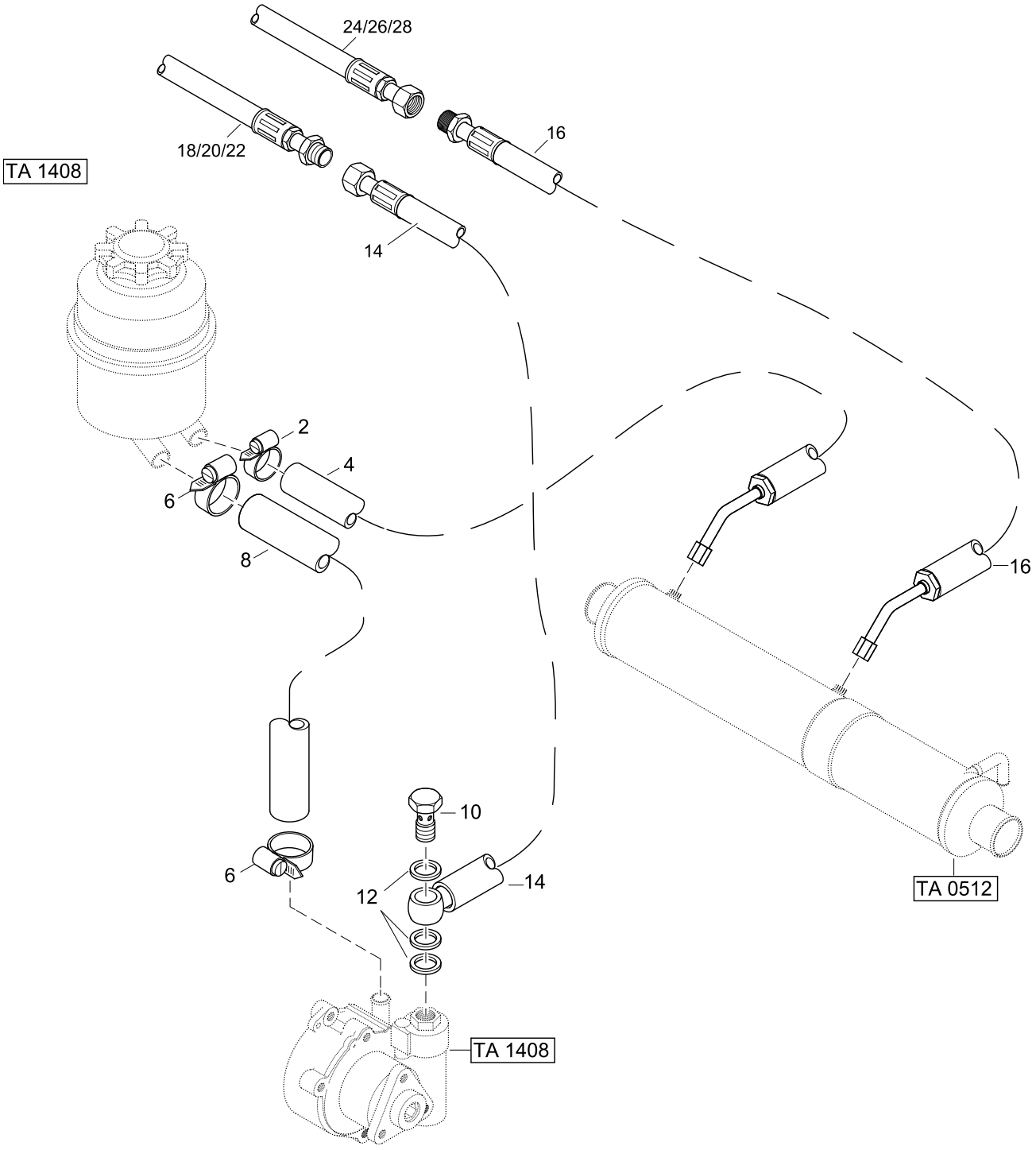

# HYDRAULIC PIPES

114 MARINE
TURBO DIESEL
+SOLAS

14094084-0

| Pos. | Part.-No. | Qty | Designation | Step |
|---|---|---|---|---|
| 2 | 2178655-0 | 1 | HOSE CLAMP 12-20/9 | .2 |
| 4 | 2178936-1 | 1 | HOSE, OIL COOLER-OILTANK | .2 |
| 6 | 2177753-0 | 2 | HOSE CLAMP 16-25/9 EN 10088-1 | .2 |
| 8 | 2178573-0 | 1 | HOSE, RESERVOIR HYDR. PUMP | .2 |
| 10 | 2180201-0 | 1 | HOLLOW SCREW M16x1,5 RW | .2 |
| 12 | 3098016-0 | 3 | SEALING RING DIN 7603-A16x20-CU | .2 |
| 14 | 2178905-0 | 1 | HOSE, PUMP-CYLINDER | .2 |
| 16 | 2178906-0 | 1 | HOSE, CYLINDER-OIL COOLER | .2 |
| 18 | 2178905-M | 1 | HOSE, ADAPTER PUMP-CYL. BRAVO STERN DRIVE (SCREWED) | .2 |
| 20 | 2178905-S | 1 | HOSE W.QUICK COUPLER PUMP —> CYL. BRAVO STERN DR. | .2 |
| 22 | 2178905-A | 1 | HOSE PUMP-CYL. ALPHA & K.COBRA STERN DRIVE | .2 |
| 24 | 2178906-M | 1 | HOSE ZYL. BRAVO STERN DRIVE - OIL COOLER (SCREWED) | .2 |
| 26 | 2178906-S | 1 | HOSE W. QUICK COUPLER ZYL. BRAVO STERNDR.—>OIL COOLER | .2 |
| 28 | 2178906-A | 1 | HOSE CYL. ALPHA & K.COBRA ST.DRIVE - COOLER | .2 |

# ENGINE PREHEATING (ACCESSORY)

22076184-0

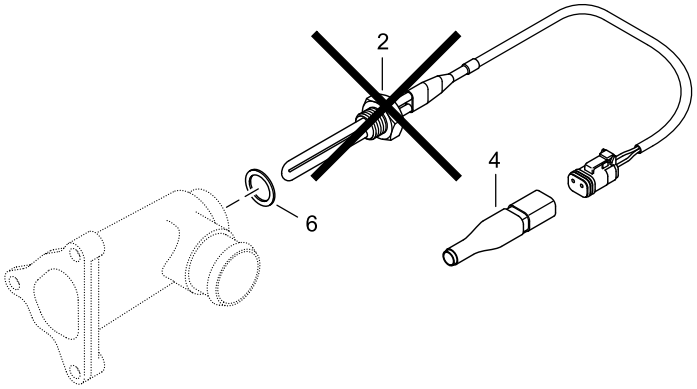


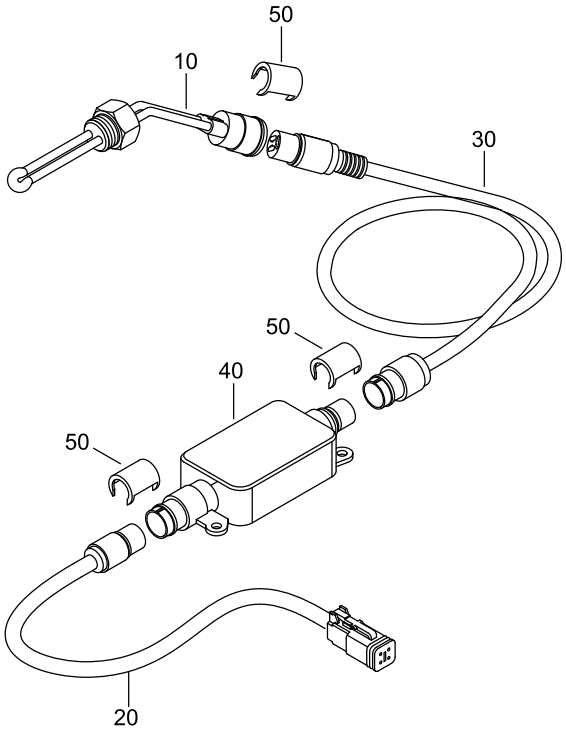

# ENGINE PREHEATING (ACCESSORY)

114 MARINE
TURBO DIESEL
+SOLAS

22076184-0

| Pos. | Part.-No. | Qty | Designation | Step |
|---|---|---|---|---|
| 2 | Z002202-0 | 1 | KIT BLOCK HEATING DEVICE 42V - 300W (RETROFITTING KIT) | .2 |
| 4 | 2178982-5 | 1 | THERMO SWITCH, PREHEATING DEVICE | .2 |
| 6 | 3098026-0 | 1 | SEALING RING DIN 7603-A22x27-CU | .2 |
| 10 | 2180393-0 | 1 | BLOCK HEATING DEVICE 42V - 300W | .2 |
| 20 | 2180396-0 | 1 | CABLE ENGINE PREHEATING DEVICE 0,5m | .2 |
| 30 | 2206318-0 | 1 | CABLE ENGINE PREHEATING DEVICE, 2m | .2 |
| 40 | 2180395-0 | 1 | THERMO SWITCH | .2 |
| 50 | 2180695-0 | 3 | SAFETY LOCK | .2 |

114 MARINE
TURBO DIESEL
+SOLAS

# INTEGR. FLYWHEELGENERATOR (IFG) (ACCESSORY)

40004084-0

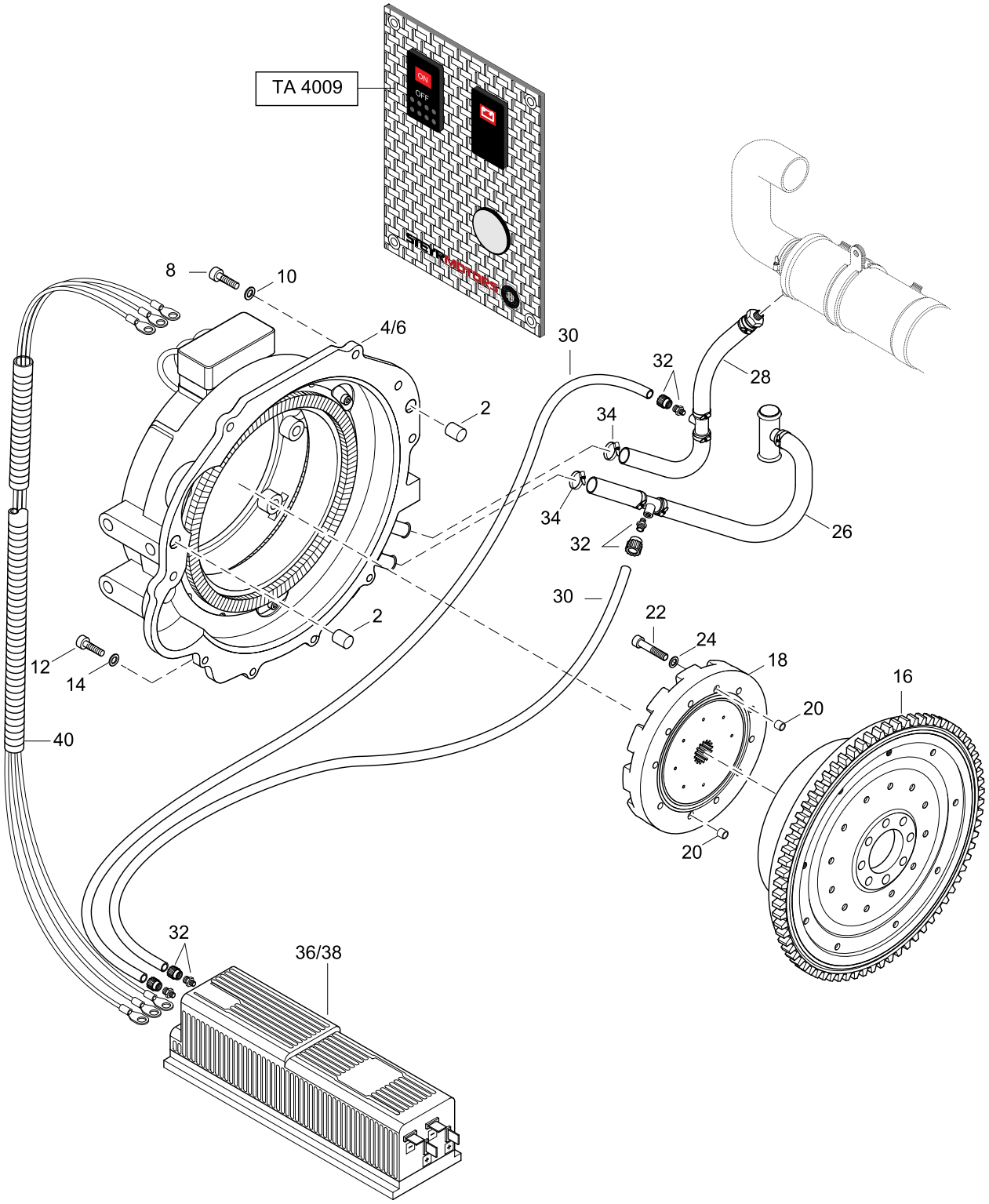

# INTEGR. FLYWHEELGENERATOR (IFG) (ACCESSORY)

114 MARINE
TURBO DIESEL
+SOLAS

40004084-0

| Pos. | Part.-No. | Qty | Designation | Step |
|---|---|---|---|---|
| 2 | 9000490-0 | 2 | PARALLEL PIN 16m6x22-ST | .2 |
| 4 | Z002104-0 | 1 | S.P.FLYWHEEL HSG. IFG 24V ASSY (PAINTED) | .2 |
| 6 | Z002105-0 | 1 | S.P.FLYWHEEL HSG. IFG 12V ASSY (PAINTED) | .2 |
| 8 | 3862545-0 | 5 | HEX.SOCK. HD.CAP SCR. DIN 912-M10x35-A2-70 | .2 |
| 10 | 3930075-0 | 5 | WASHER DIN 125 A10.5-140HV-A2 | .2 |
| 12 | 3862433-0 | 4 | HEX.SOCK. HD.CAP SCR. DIN 912-M8x30-A2-70 | .2 |
| 14 | 3930103-0 | 4 | WASHER DIN 125-8.4-140HV-A2 | .2 |
| 16 | Z002430-0 | 1 | S.P.FLYWHEEL 4 CYL. „IFG“ ASSY (BALANCED) | .2 |
| 18 | Z002106-0 | 1 | S.P. COUPLER „IFG“ | .2 |
| 20 | 2203543-0 | 2 | FITTING SLEEVE DM11 (TO M8) | .2 |
| 22 | 9000473-0 | 12 | HEX.SOCK. HD.CAP SCR. DIN 912-M8x100-12.9-DAC A500 | .2 |
| 24 | 3930103-0 | 12 | WASHER DIN 125-8.4-140HV-A2 | .2 |
| 26 | Z002107-0 | 1 | COOLING WATER HOSE ASSY. „IFG“ (RETURN) | .2 |
| 28 | Z002108-0 | 1 | COOLING WATER HOSE ASSY. „IFG“ (SUPPLY) | .2 |
| 30 | 2179298-0 | 2 | HOSE 8x1.25 L=2000mm | .2 |
| 32 | 2179297-0 | 4 | FAST SCREW CONNECTION | .2 |
| 34 | 2178655-0 | 8 | SCHLAUCHSCHELLE 12-20/9 | .2 |
| 36 | Z002110-0 | 1 | ELECTR.CONTROL SYSTEM IFG 24V | .2 |
| 38 | Z002111-0 | 1 | ELECTR.CONTROL SYSTEM IFG 12V | .2 |
| 40 | Z002112-0 | 1 | KIT CONNECTING CABLE IFG | .2 |

114 MARINE TURBO DIESEL +SOLAS

# PUSH BUTTON PANEL „IFG“ TILL -->2010

40096184-0

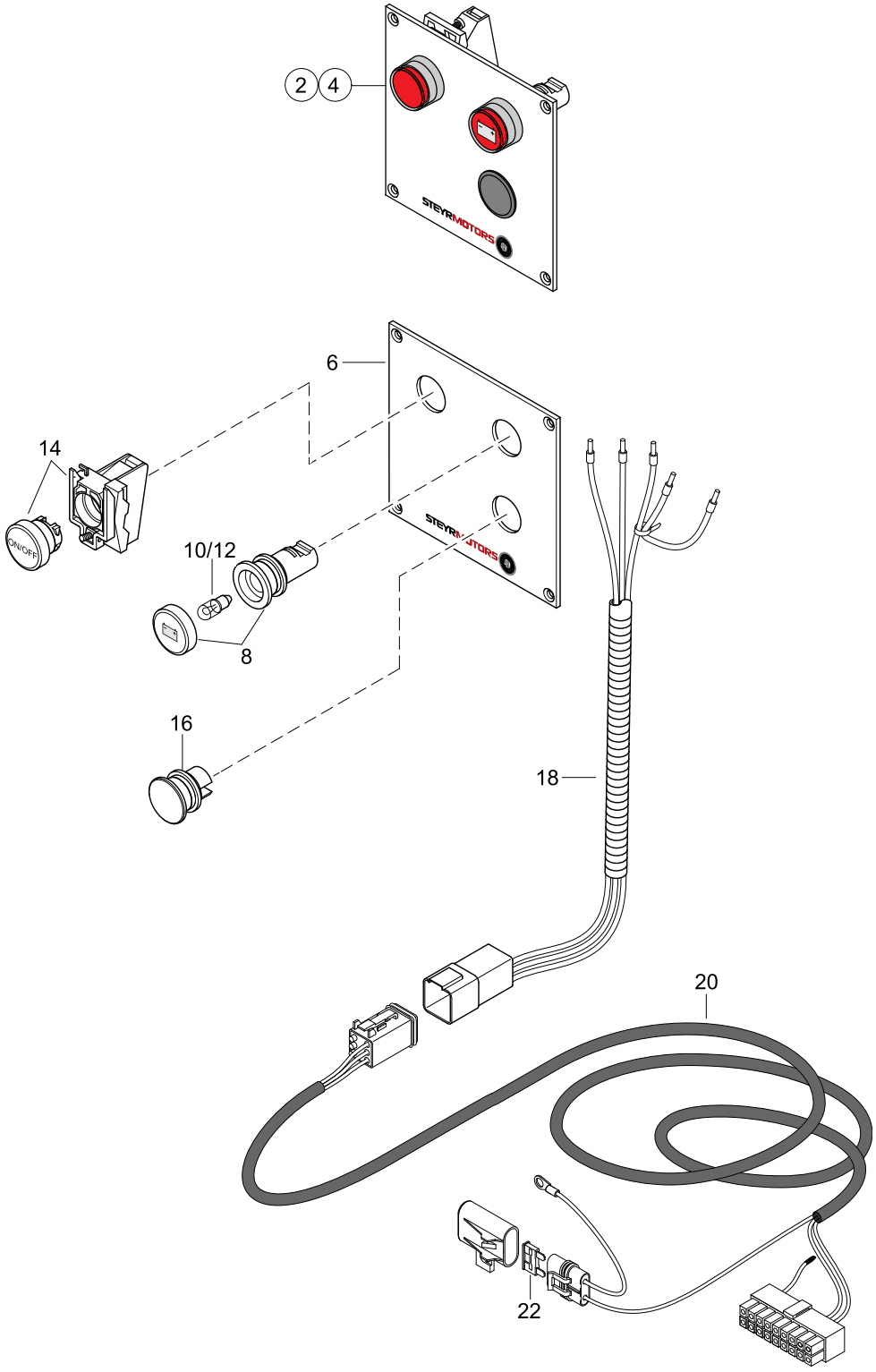

## PUSH BUTTON PANEL „IFG“
## TILL -->2010

114 MARINE
TURBO DIESEL
+SOLAS

40096184-0

| Pos. | Part.-No. | Qty | Designation | Step |
|---|---|---|---|---|
| 2 | Z002114-0 | 1 | PUSH BUTTON PANEL IFG 24V ASSY | .2 |
| 4 | Z002113-0 | 1 | PUSH BUTTON PANEL IFG 12V ASSY | .2 |
| 6 | 2179284-0 | 1 | INSTRUMENT PANEL IFG | ..3 |
| 8 | Z002115-0 | 1 | WARNING-LIGHT BATTERY CHARGE ASSY. 12V & 24V | ..3 |
| 10 | 2179162-0 | 1 | MINIATUR LAMP 12V/2W 10x28 | ..3 |
| 12 | 2179141-0 | 1 | MINIATUR LAMP 24V/3W 10x28 | ..3 |
| 14 | 2179293-5 | 1 | IGNITION SWITCH RED ASSY. | ..3 |
| 16 | 2179320-0 | 1 | BLIND PLUG, BLACK | ..3 |
| 18 | 2206298-0 | 1 | WIRING HARNESS ASSY. IFG-PANEL | ..3 |
| 20 | 2206299-0 | 1 | CONNE. CABLE AY. 8m IFG-PANEL | ..3 |
| 22 | 11345 | 1 | FUSE 10A, RED | ..3 |

# PUSH BUTTON PANEL „IFG“ FROM 2010-->

40096184-1

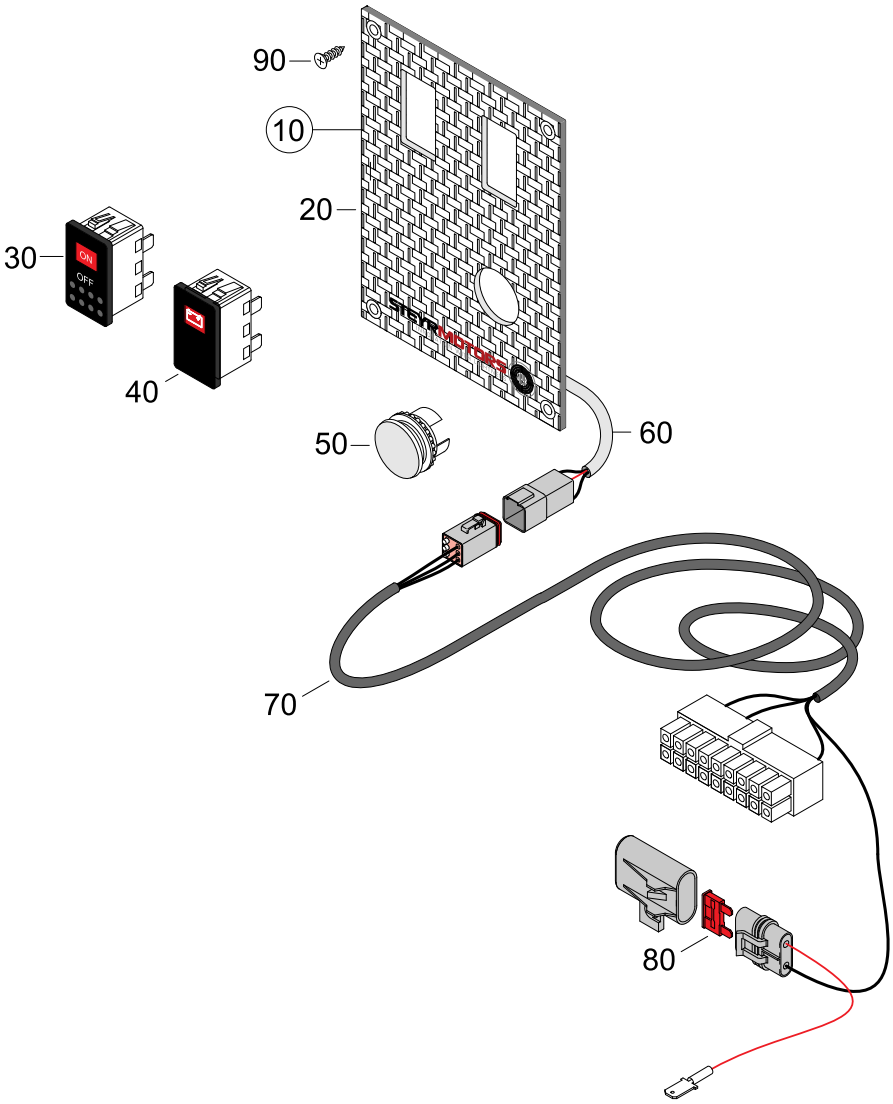

## PUSH BUTTON PANEL „IFG“
## FROM 2010-->

114 MARINE
TURBO DIESEL
+SOLAS

40096184-1

| Pos. | Part.-No. | Qty | Designation | Step |
|---|---|---|---|---|
| 10 | 2179968-0 | 1 | PUSH BUTTON PANEL IFG (LED) | .2 |
| 20 | 2180092-0 | 1 | INSTRUMENT PANEL IFG | ..3 |
| 30 | Z002199-0 | 1 | IGNITION SWITCH | ..3 |
| 40 | Z002197-0 | 1 | WARNING LED, BATTERY CHARGE | ..3 |
| 50 | 2179320-0 | 1 | BLIND PLUG, BLACK | ..3 |
| 60 | 2206298-0 | 1 | WIRING HARNESS ASSY. IFG-PANEL | ..3 |
| 70 | 2206299-0 | 1 | CONNE. CABLE AY. 8m IFG-PANEL | ..3 |
| 80 | 11345 | 1 | FUSE 10A, RED | ..3 |
| 90 | 9000817-0 | 4 | CR.REC.COUNT.SUNK HD.TPG.SCR. 3.5x16 | ..3 |

114 MARINE
TURBO DIESEL
+SOLAS

# HYBRID

41006184-0

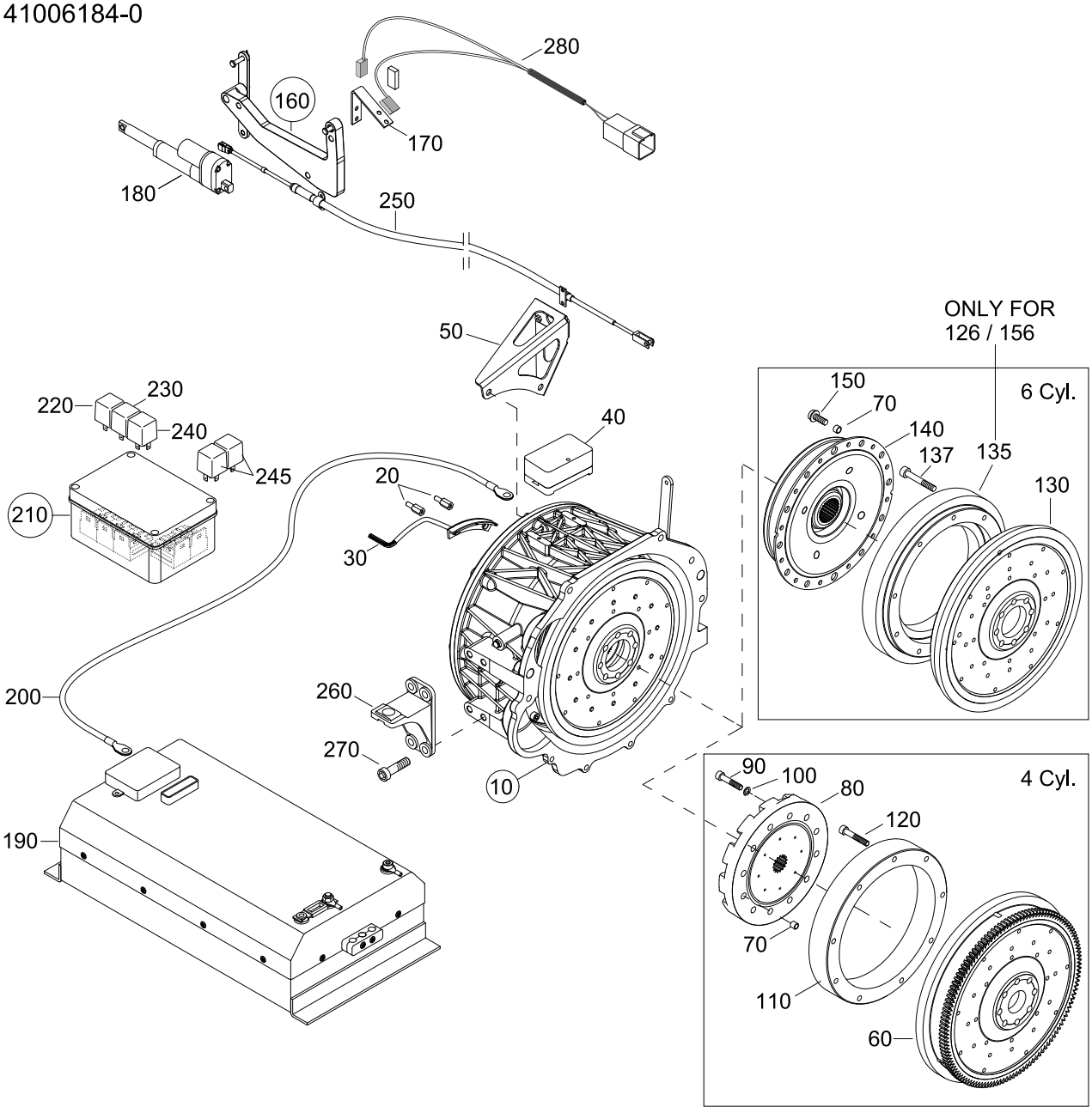

## HYBRID

114 MARINE
TURBO DIESEL
+SOLAS

41006184-0

| Pos. | Part.-No. | Qty | Designation | Step |
|---|---|---|---|---|
| 10 | Z002171-0 | 1 | ELECTRIC MOTOR ASSY. | .2 |
| 20 | 2179623-1 | 2 | DISTANCE BOLT | ..3 |
| 30 | Z002173-0 | 1 | HALL SENSOR ASSY. | ..3 |
| 40 | 2179758-0 | 1 | CONNECTION PLATE | ..3 |
| 50 | 2180122-0 | 1 | GEAR SHIFT BRACKET | ..3 |
| 60 | 2203870-0 | 1 | FLYWHEEL ASSY. RW | .2 |
| 70 | 2203543-0 | 2 | FITTING SLEEVE | .2 |
| 80 | Z002106-0 | 1 | S.P. COUPLER | .2 |
| 90 | 9000520-0 | 12 | HEX.SOCK. HD.CAP SCR. ISO 4762-M8x50-10.9-DAC | .2 |
| 100 | 3930103-0 | 12 | WASHER DIN 125-8.4-140HV-A2 | .2 |
| 110 | 2180415-0 | 1 | FLYWHEEL MASS | .2 |
| 120 | 3862462-0 | 9 | HEX.SOCK. HD.CAP SCR. DIN 912-M8x60-8.8-A2C | .2 |
| 130 | 2177734-N | 1 | FLYWHEEL ASSY. RW | .2 |
| 135 | 2180522-0 | 1 | FLYWHEEL MASS (ONLY MO126 & MO156) | .2 |
| 137 | 3862452-0 | 9 | HEX.SOCK. HD.CAP SCR.DIN 912-M8x50-8.8-A2C (ONLY MO126 & MO156) | .2 |
| 140 | Z026060-0 | 1 | S.P. COUPLER | .2 |
| 150 | 9000685-0 | 12 | LOCKING SCREW-M8x16-10.9 | .2 |
| 160 | 2179739-1 | 1 | CONTROL BRACKET ASSY. | .2 |
| 170 | 2180452-0 | 1 | BRACKET, POSITION SENSOR | .2 |
| 180 | Z002174-0 | 1 | CONTROL MOTOR, CLUTCH | .2 |
| 190 | Z002195-0 | 1 | ELECTR.CONTROL SYSTEM | .2 |
| 200 | Z021009-0 | 3 | CONNECTING CABLE | .2 |
| 210 | Z002175-0 | 1 | RELAISBOX ASSY. | .2 |
| 220 | 2179961-0 | 1 | PROGRAMMED RELAIS, A12 | ..3 |
| 230 | 2179960-0 | 1 | PROGRAMMED RELAIS, A11 | ..3 |
| 240 | 2179959-0 | 1 | PROGRAMMED RELAIS, A10 | ..3 |
| 245 | 9000183-0 | 2 | RELAY 12V 40A | ..3 |
| 250 | Z002178-0 | 1 | GEAR SHIFT CABLE ASSY. | .2 |
| 260 | 2178722-1 | 2 | BRACKET FLYWHEEL HOUSING | .2 |
| 270 | 9000081-0 | 8 | HEX.SOCK.HD.CAP SCR. DIN 912-M12x35-8.8-A3C | .2 |
| 280 | Z002194-0 | 1 | POSITION SENSOR ASSY. | .2 |

# HEATING UNIT, CIRCULATION PUMP (ACCESSORY)

60124084-0

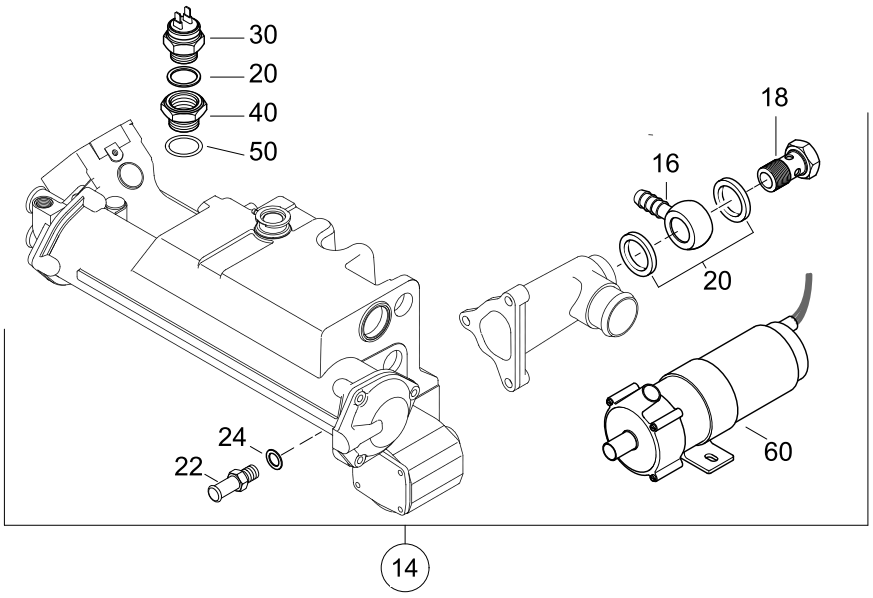


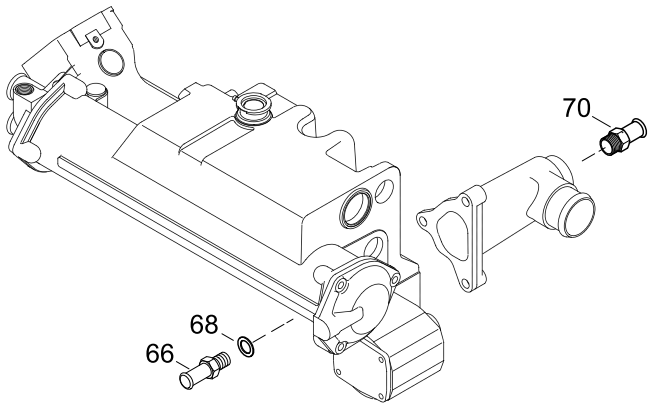

# HEATING UNIT, CIRCULATION PUMP (ACCESSORY)

114 MARINE
TURBO DIESEL
+SOLAS

60124084-0

| Pos. | Part.-No. | Qty | Designation | Step |
|---|---|---|---|---|
| 14 | 2178774-2 | 1 | HOT WATER FITT. KIT W. PU. (W/O WATER COOLED TURBO) 48219001—> | .2 |
| 16 | 2178770-0 | 1 | BANJO | ..3 |
| 18 | 9000093-0 | 1 | HOLLOW SCREW M22x1,5 DIN 7643-18-A3C | ..3 |
| 20 | 3098026-0 | 3 | SEALING RING DIN 7603-A22x27-CU | ..3 |
| 22 | 2178698-0 | 1 | NIPPLE HEATER ON OILCOOLER | ..3 |
| 24 | 3098013-0 | 1 | SEALING RING DIN 7603-A12x18-CU | ..3 |
| 30 | 2178771-0 | 1 | THERMO SWITCH, HEATINGPUMP | ..3 |
| 40 | 2180078-0 | 1 | ADAPTER THERMO SWITCH | ..3 |
| 50 | 2179242-0 | 1 | O-RING 27x2,5 | ..3 |
| 60 | 2178772-0 | 1 | CIRCULATION PUMP | ..3 |
| 66 | 2178698-0 | 1 | NIPPLE HEATER ON OILCOOLER | .2 |
| 68 | 3098013-0 | 1 | SEALING RING DIN 7603-A12x18-CU | .2 |
| 70 | 2178607-1 | 1 | HOSE CONNECTOR HEATER (TILL —>48218999) | .2 |