STEYRMOTORS
INNOVATION WITH LIGHTNESS

STEYR MARINE ENGINES

144 MARINE
TURBO DIESEL
+SOLAS

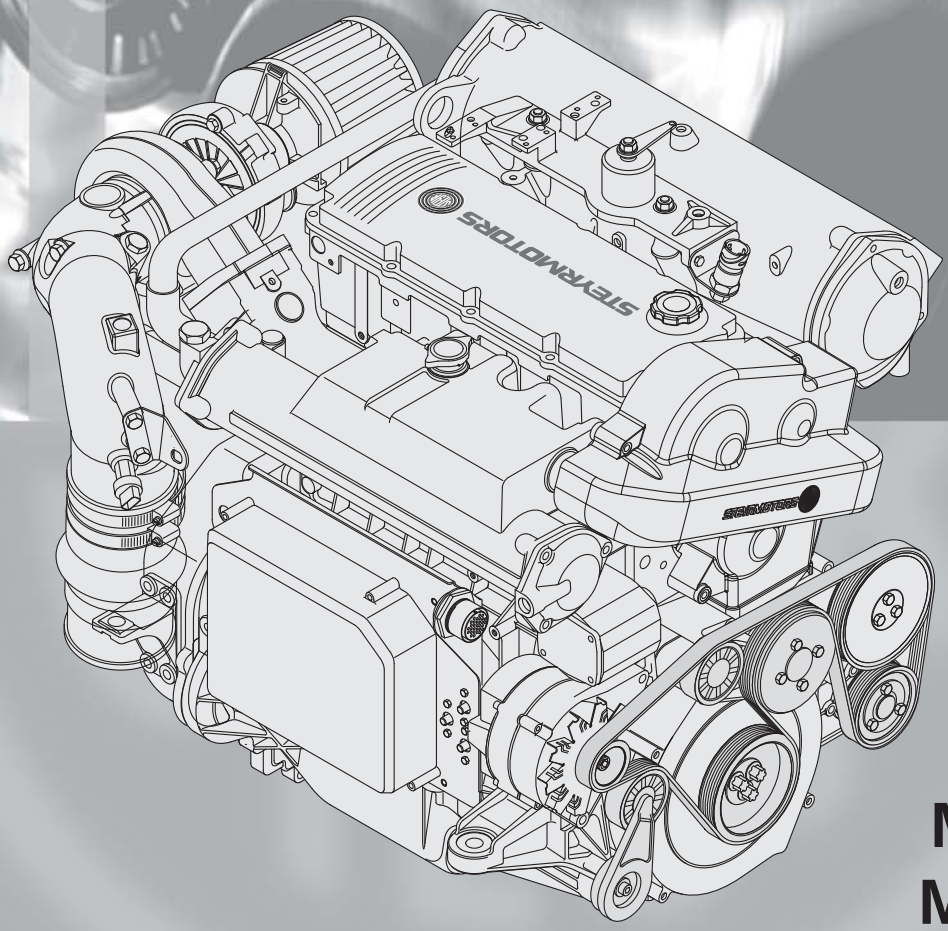

MO144V38
MO144M38

Serial no.: 48217 001 -->

SPARE PARTS CATALOGUE

P/N Z001005-0 8th Edition, May 2011

TEL ++43 / 7252 / 222 / 20 **FAX** ++43 / 7252 / 222 / 29 **@** e.sales@steyr-motors.com

www.steyr-motors.com

STEYR MOTORS GmbH
Im Stadtgut B1, A-4407 Steyr-Gleink, AUSTRIA

When ordering spare parts are always indicate serial engine number.
This will speed up delivery and help to avoid mistakes.

The primary model and serial number is located on the engine as illustrated. These numbers are required when requesting warranty and ordering parts.

Model identification

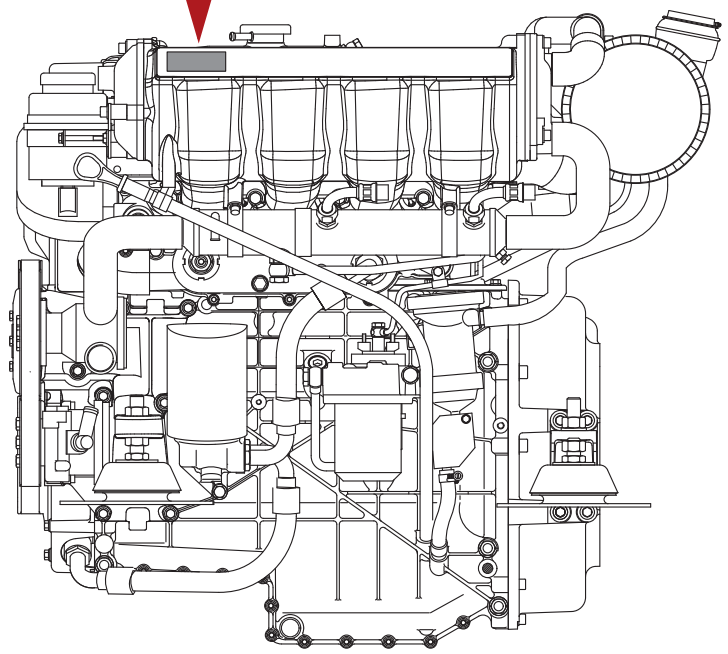

07001

Substituting automotive or generally supplied parts and hardware will often result in less than desired performance. For this reason, you should insist on the known quality of genuine STEYR Marine matched replacement parts, and should never use parts of unknown quality.

We reverse the right to make changes in design and execution which incorporate advances in technology!

SIGNS AND SYMBOLS

1

STEYRMOTORS
INNOVATION WITH LIGHTNESS

TA 0101

CYLINDERBLOCK

144 MARINE
TURBO DIESEL
+SOLAS

2 01014084-0

3 4 5 6 8 9 7

Pos.	Part.-No.	Qty	Designation	Step
24	Z002676-0	1	SPARE PART COVER T-BELT —>48226146	.2
26	2203711-1	1	COVER T-BELT, UPPER PART 48226147—>	.2
28	9000538-0	3	HEX.FLANGE BOLT EN 1665-M6x50 A2-70	.2

1 Table number

2 Partlist number for whole table/ functional groups

3 Positions number

4 Spare part number

5 Quantity for one engine respectively assembly group

6 Designation and description of spare part

7 Groupparts are marked with a circle around the position number. Parts in the list below these, which had an increased step number by one, will be included at delivery.

8 **—> 4.....** Arrow before engine number: Spare part UNTIL and LOWER

9 **4..... —>** Arrow past engine number: Spare part FROM and HIGHER

ACROBAT

... back to "starting point"

... one page back

... one page vorward

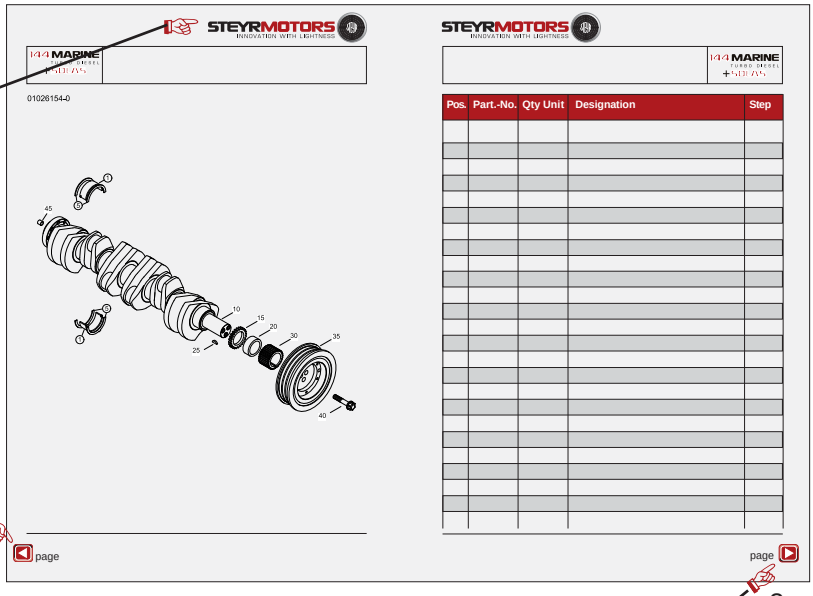

144 MARINE
TURBO DIESEL
+SOLAS

TABLE OF CONTENTS - SPARE PARTS CATALOGUE

TA 0100 Page 12
MOUNT BRACKET, LIFTING EYE, GASKET SET

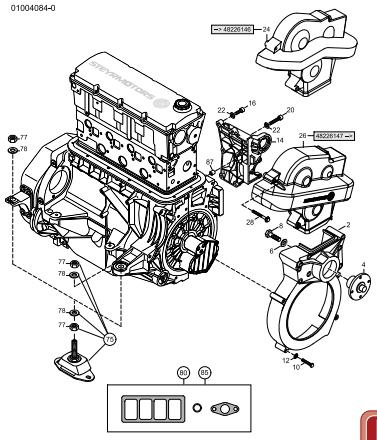

TA 0101 Page 14
CRANKCASE

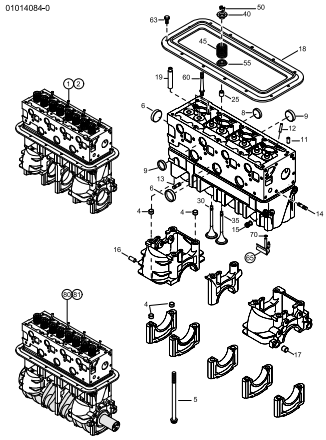

TA 0102 Page 16
CRANKSHAFT, BEARING, DAMPER

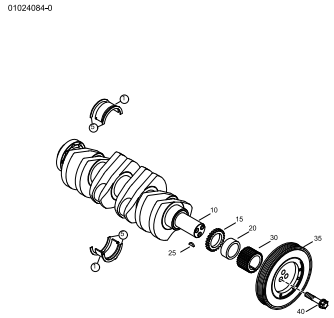

TA 0103 Page 18
FLYWHEEL, FLYWHEELHOUSING

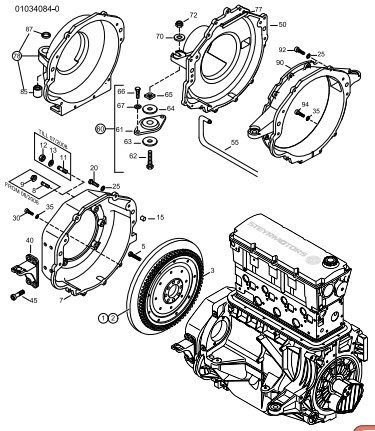

TA 0104 Page 22
PISTON, RINGS AND PIN, CONNECTION ROD

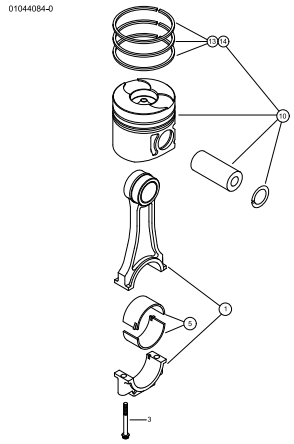

TA 0105 Page 24
CAMSHAFT, HOUSING

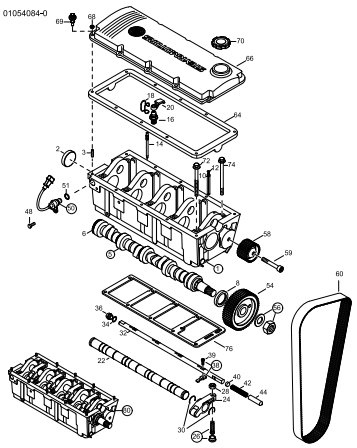

TA 0106 Page 28
OILPUMP, OILPIPE, OILPAN

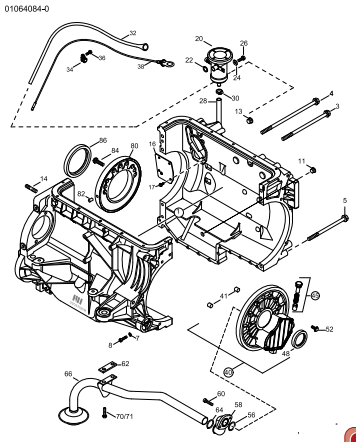

TA 0108 Page 32
INTERCOOLER

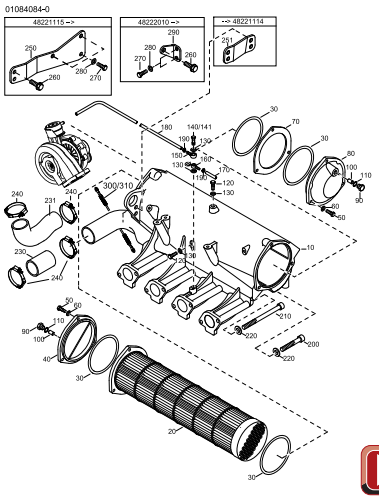

TA 0109 Page 36
POWER TAKE OFF FRONT

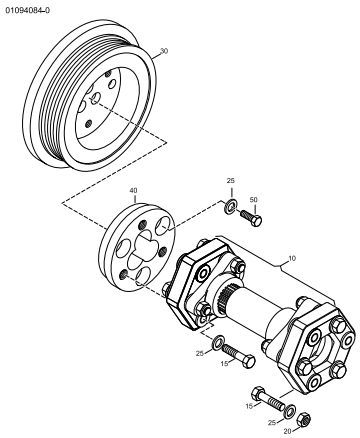

TABLE OF CONTENTS - SPARE PARTS CATALOGUE

144 MARINE
TURBO DIESEL
+SOLAS

TA 0113 Page 38
OILCOOLER

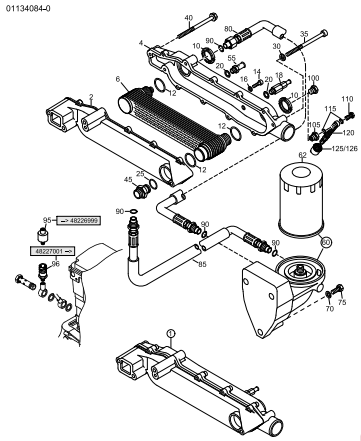

TA 0114 Page 42
EXHAUST, HEAT EXCHANGER, GASKET

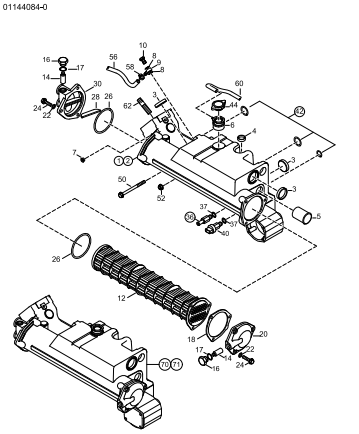

TA 0200 Page 46
COUPLER - SMALL FLYWHEEL

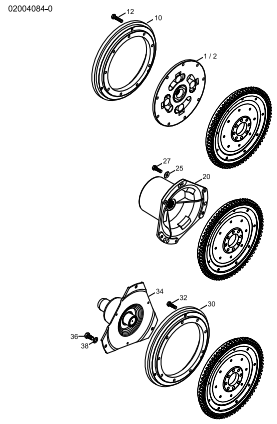

TA 0201 Page 48
COUPLER

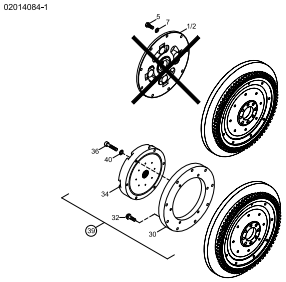

TA 0201 Page 50
COUPLER

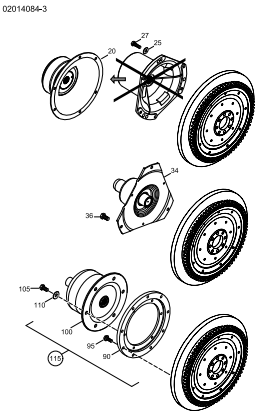

TA 0302 Page 52
FUEL PUMP, UNIT INJECTOR, PIPE

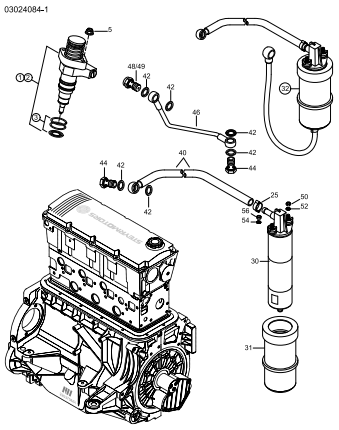

TA 0304 Page 54
AIRFILTER -->48219069

(ONLY FOR MO144V38)

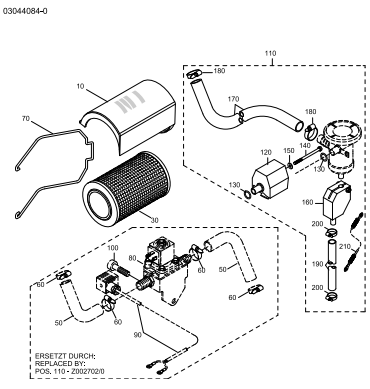

TA 0304 Page 56
AIRFILTER 48219070 -->

(ONLY FOR MO144V38)

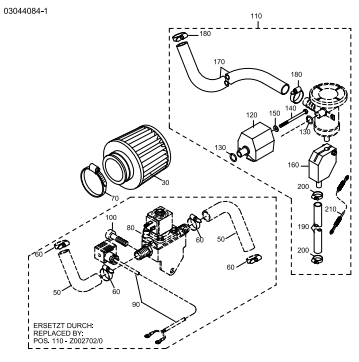

TA 0304 Page 58
AIRFILTER --> 48228079

(ONLY FOR MO144M38)

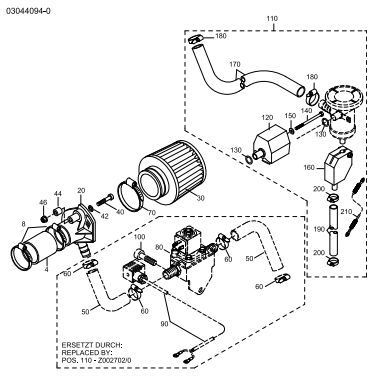

144 MARINE
TURBO DIESEL
+SOLAS

TABLE OF CONTENTS - SPARE PARTS CATALOGUE

TA 0304 Page 60
AIRFILTER 48228080 -->
(ONLY FOR MO144M38)

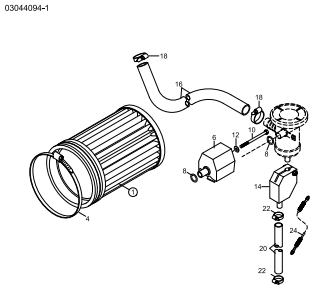

TA 0305 Page 62
TURBOCHARGER
(ONLY FOR MO144V38)

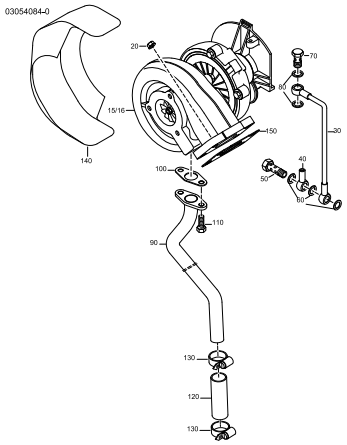

TA 0305 Page 64
TURBOCHARGER
(ONLY FOR MO144M38)

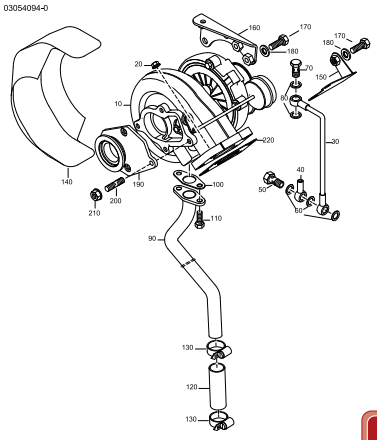

TA 0308 Page 66
CONTR. SOLENOID, POTENTIOMETER

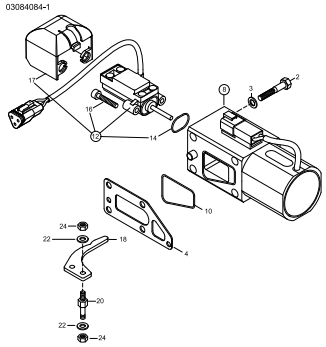

TA 0309 Page 68
FUEL FILTER

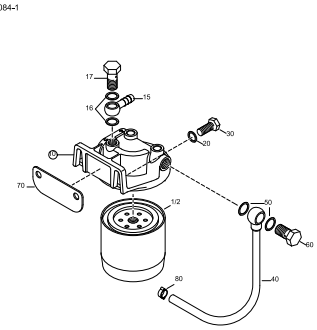

TA 0311 Page 70
GLOW PIN

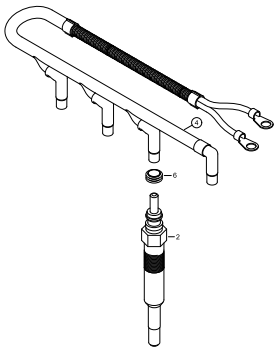

TA 0312 Page 72
POT. ACCELE., BOOST PRESSURE SENSOR

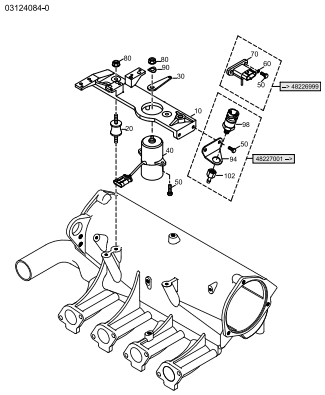

TA 0401 Page 74
HIGH RISER, EXHAUSTPIPE
(ONLY FOR MO144V38)

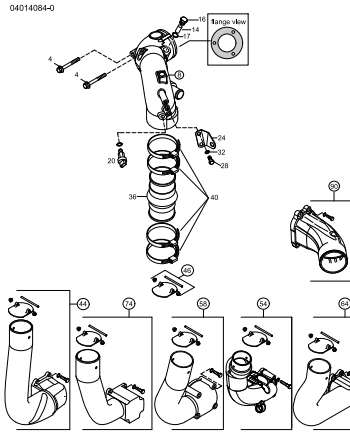

TA 0401 Page 76
HIGH RISER, EXHAUSTPIPE
(ONLY FOR MO144M38)

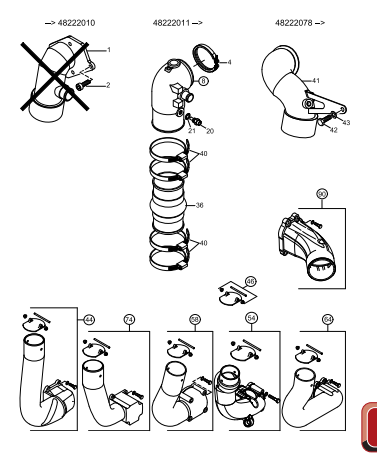

STEYRMOTORS
INNOVATION WITH LIGHTNESS

TABLE OF CONTENTS - SPARE PARTS CATALOGUE

144 MARINE
TURBO DIESEL
+SOLAS

TA 0503 Page 78
WATERPIPE, THERMOSTAT

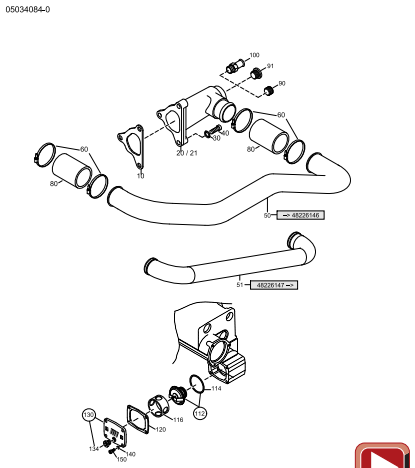

TA 0504 Page 80
WATERPUMP

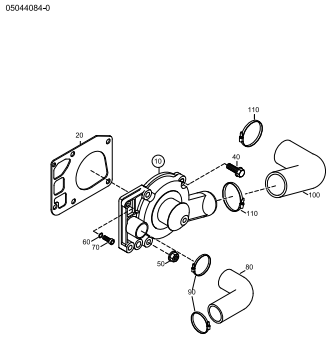

TA 0505 Page 82
DRIVE BELTS, PULLEYS, TENSIONER

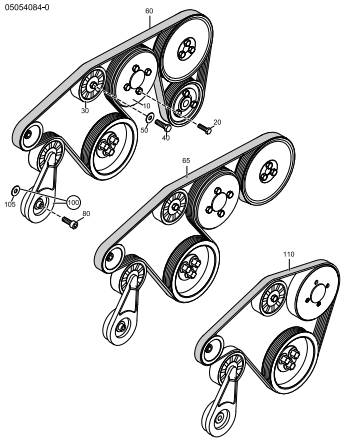

TA 0510 Page 84
RAW WATER PUMP

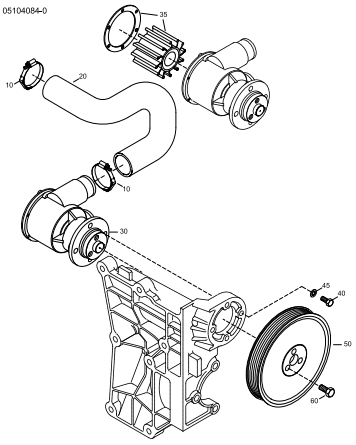

TA 0512 Page 86
RAW WATER PIPES, FUEL-OIL COOLER

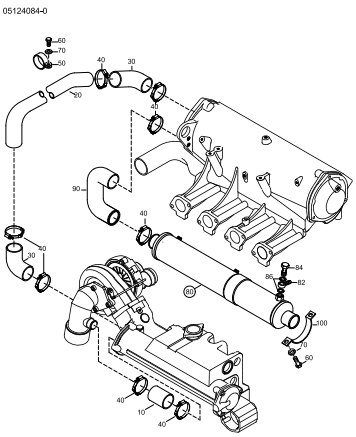

TA 0601 Page 88
ALTERNATOR

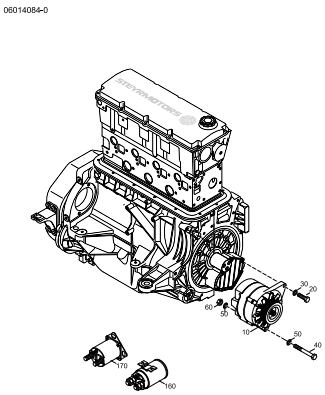

TA 0603 Page 90
STARTING

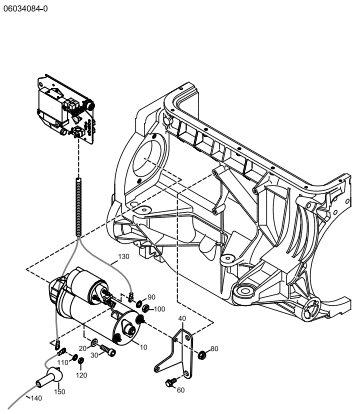

TA 0605 Page 92
ENGINE HARNESS

--> 48221066

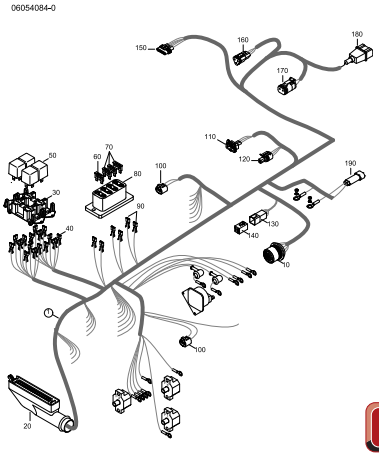

TA 0605 Page 94
ENGINE HARNESS

48221067 --> 48226999

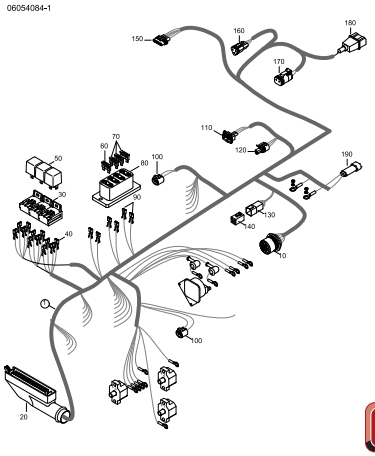

144 MARINE
TURBO DIESEL
+SOLAS

TABLE OF CONTENTS - SPARE PARTS CATALOGUE

TA 0605 Page 96
ENGINE HARNESS

48227001 -->

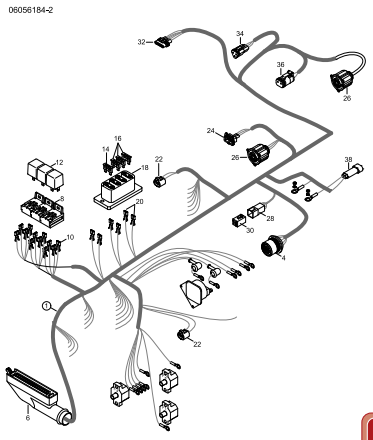

TA 0606 Page 98
SECURETYSYSTEM, FUSES, ECU, E-BOX

--> 48221066

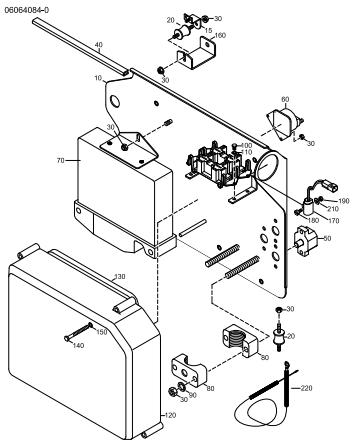

TA 0606 Page 100
SECURETYSYSTEM, FUSES, ECU, E-BOX

48221067 -->

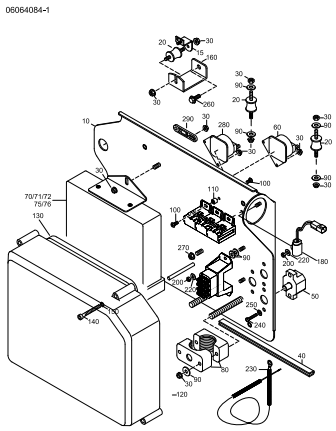

TA 0608 Page 102
INSTRUMENT PANEL (STANDARD)

TILL -->2010

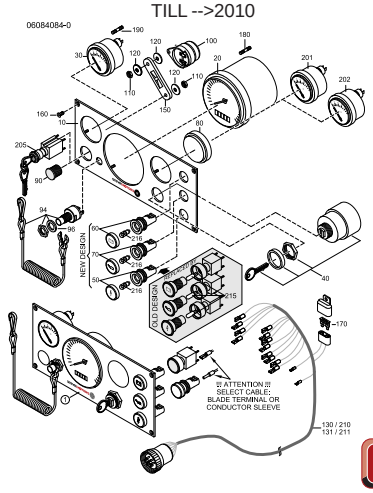

TA 0607 Page 104
INSTRUMENT PANEL (STANDARD)

FROM 2010-->

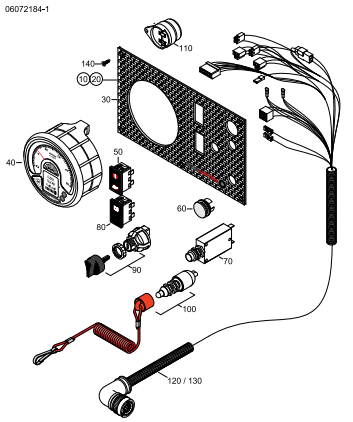

TA 0609 Page 106
INSTRUMENT PANEL SOLAS (STANDARD)

TILL -->2010

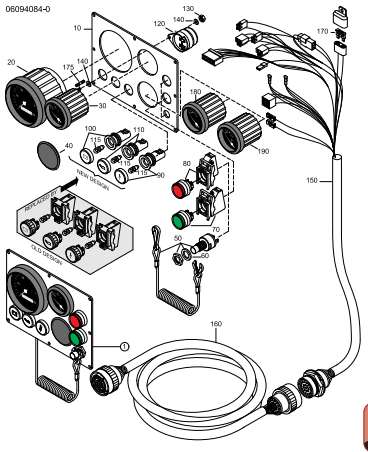

TA 0609 Page 108
INSTRUMENT PANEL SOLAS (STANDARD)

FROM 2010-->

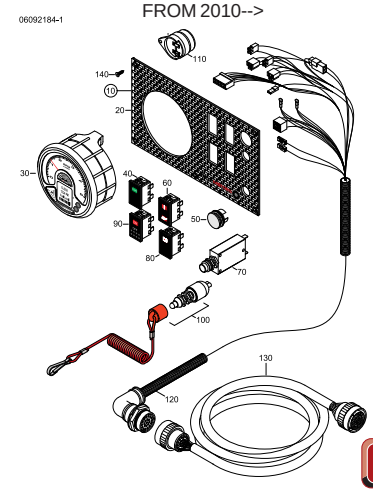

TA 0610 Page 110
DISPLAY

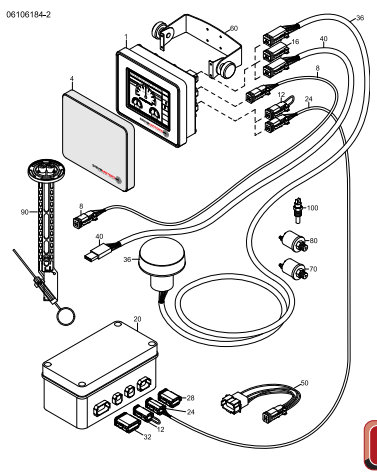

TA 0611 Page 112
SWITCH PANEL FOR DISPLAY

TILL -->2010

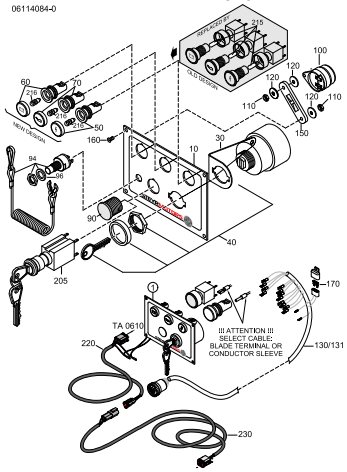

STEYRMOTORS
INNOVATION WITH LIGHTNESS

TABLE OF CONTENTS - SPARE PARTS CATALOGUE

144 MARINE
TURBO DIESEL
+SOLAS

TA 0611 Page 114
SWITCH PANEL FOR DISPLAY

FROM 2010-->

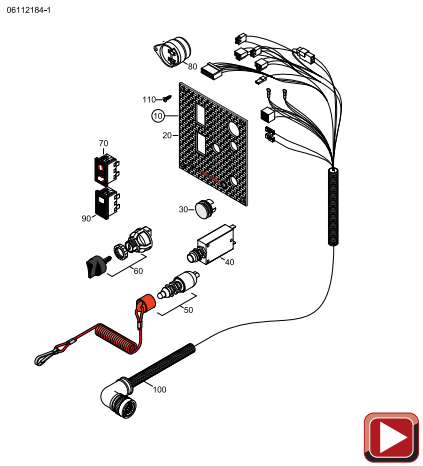

TA 0612 Page 116
PUSH BUTTON PANEL SOLAS FOR DISPLAY

TILL -->2010

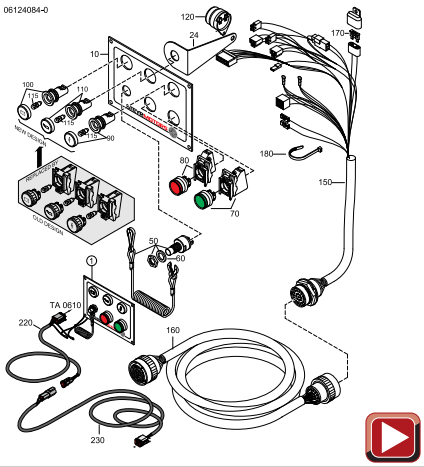

TA 0612 Page 118
PUSH BUTTON PANEL SOLAS FOR DISPLAY

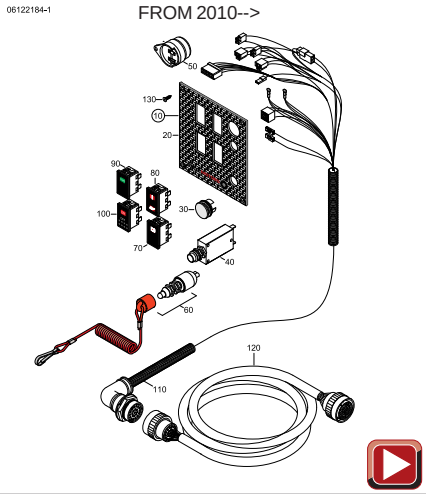

TA 0613 Page 120
EXTENSION CABLE INSTRUMENTS

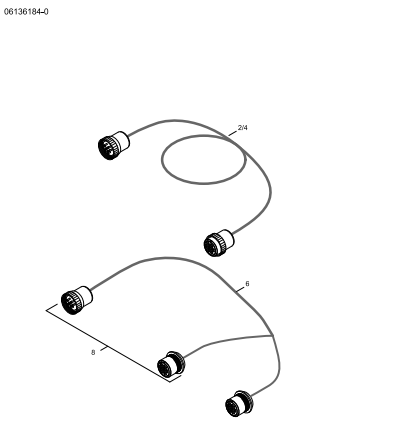

TA 0700 Page 122
TRANSMISS., MOUNTING BRACKETS, PIPES

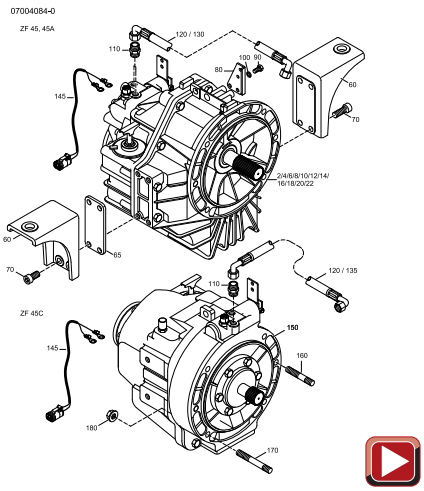

TA 0701 Page 124
TRANSMISSION-SHAFT, PTO-SHAFT (STEEL)

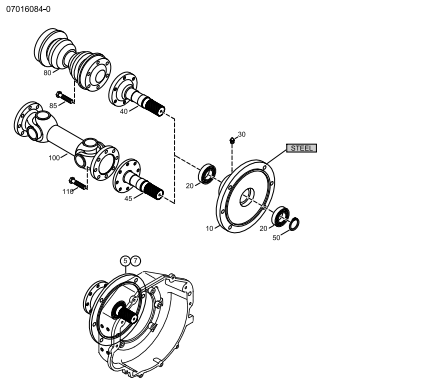

TA 0701 Page 126
TRANSMISSION-SHAFT, PTO-SHAFT (ALU)

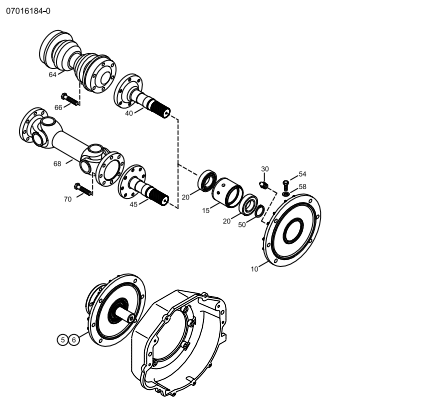

TA 0705 Page 128
TRANSMISSION GEAR SHIFT, CONTROLS

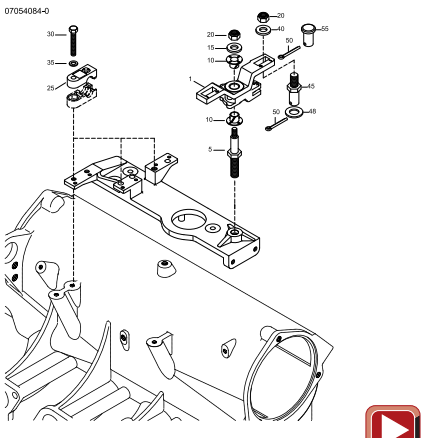

TA 0720 Page 130
DRIVE ADAPTOR VOLVO STERNDRIVE

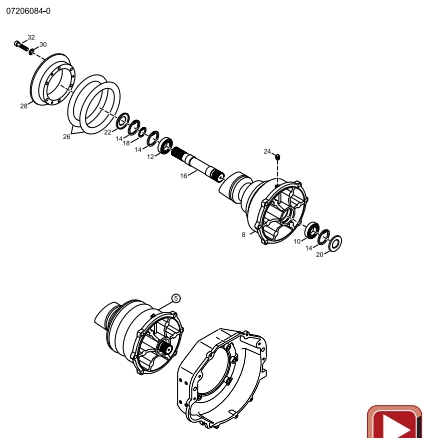

144 MARINE
TURBO DIESEL
+SOLAS

TABLE OF CONTENTS - SPARE PARTS CATALOGUE

TA 0730 Page 132
DRIVE SHAFT EXT. MERCURY STERNDRIVE

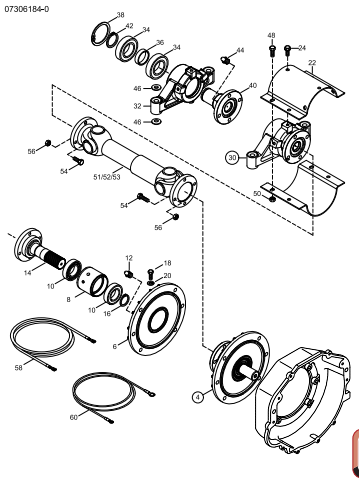

TA 1408 Page 134
HYDRAULIC PUMP

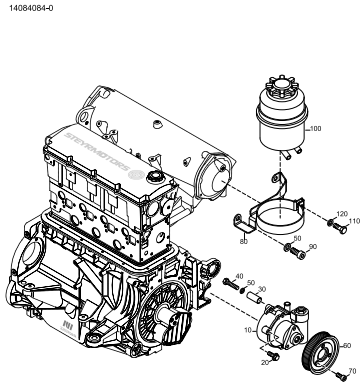

TA 1409 Page 136
HYDRAULIC PIPES

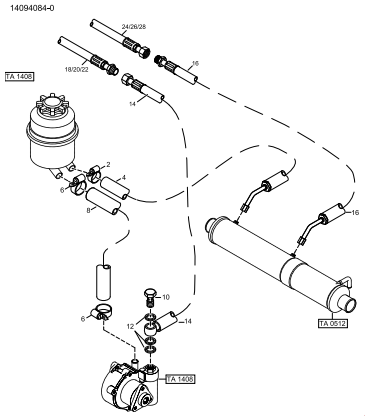

TA 2207 Page 138
ENGINE PREHEATING

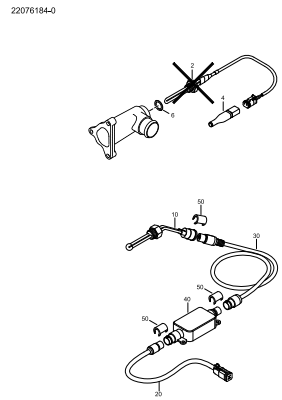

TA 4000 Page 140
INTEGR. FLYWHEELGENERATOR (IFG)

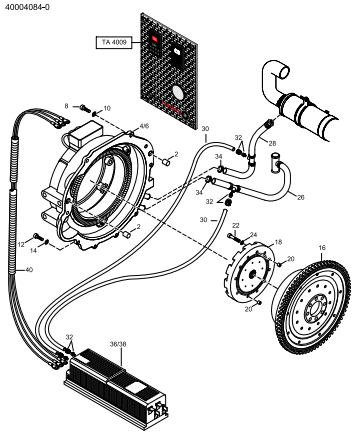

TA 4009 Page 142
PUSH BUTTON PANEL „IFG“

TILL -->2010

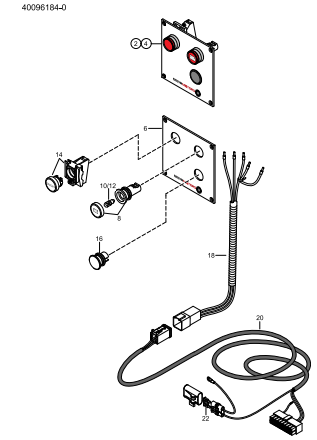

TA 4009 Page 144
PUSH BUTTON PANEL „IFG“

FROM 2010-->

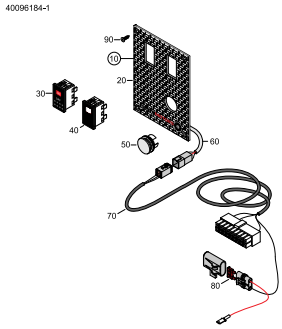

TA 4100 Page 146
HYBRID

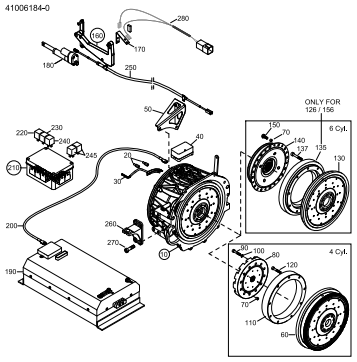

TA 6012 Page 148
HEATING UNIT, CIRCULATION PUMP

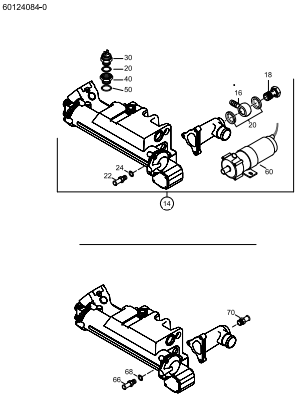

TABLE OF CONTENTS - SPARE PARTS CATALOGUE

144 MARINE TURBO DIESEL +SOLAS

MOUNT BRACKET, LIFTING EYE, GASKET SET

01004084-0

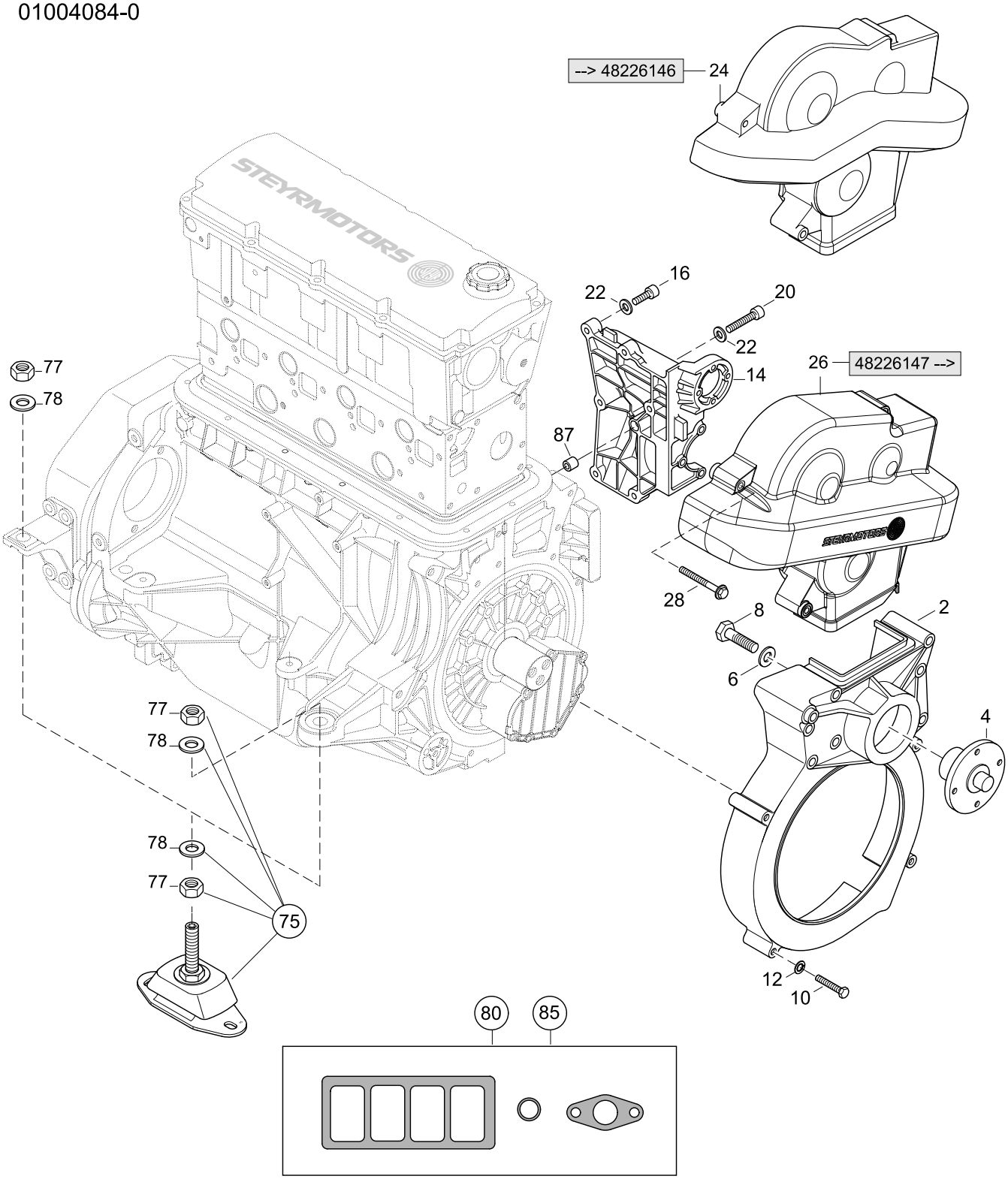

MOUNT BRACKET, LIFTING EYE, GASKET SET

144 MARINE
TURBO DIESEL
+SOLAS

01004084-0

Pos.	Part.-No.	Qty	Designation	Step
2	Z002406-0	1	COVER T-BELT ASSY, LOWER WITH BEARING (PAINTED)	.2
4	2203516-2	1	BEARING SHAFT	.2
6	2203563-0	1	SUPPORT WASHER, BEARING SHAFT	.2
8	3802515-0	1	HEX.HD.SCR. ISO 4017-M10x20-8.8-A3C	.2
10	9000289-0	11	HEX.HD.BOLT ISO 4014-M6x65-8.8-A2C	.2
12	3930070-0	11	WASHER DIN 125-6-140HV-A2	.2
14	Z002428-0	1	BRACKET, ENGINE MOUNT (PAINTED (PAINTED)	.2
16	9000045-0	4	HEX.SOCK. HD.CAP SCR. DIN 912-M8x40-8.8-DAC A500	.2
20	3862466-0	3	HEX.SOCK. HD.CAP SCR. DIN 912-M8x65-8.8-A2C	.2
22	3930103-0	7	WASHER DIN 125-8.4-140HV-A2	.2
24	Z002676-0	1	SPARE PART COVER T-BELT	.2
26	2203711-1	1	COVER T-BELT, UPPER PART	.2
28	9000538-0	3	HEX.FLANGE BOLT EN 1665-M6x50 A2-70	.2
75	2203804-5	4	ENGINE MOUNT ASSY 55SH	.2
77	9000442-0	2	HEX.NUT ISO 8673-M18x1,5-8-A-DAC	..3
78	9000441-0	2	LOCKWASHER 19,5x34,5	..3
80	Z002409-0	1	SEAL KIT_4 CYL. MARINE ENGINE	.2
85	Z002409-6	1	SEAL KIT 4 CYL. MARINE ENGINE WO. FRAME SEAL	.2
87	2203543-0	2	FITTING SLEEVE	.2

144 MARINE
TURBO DIESEL
+SOLAS

CRANKCASE

01014084-0

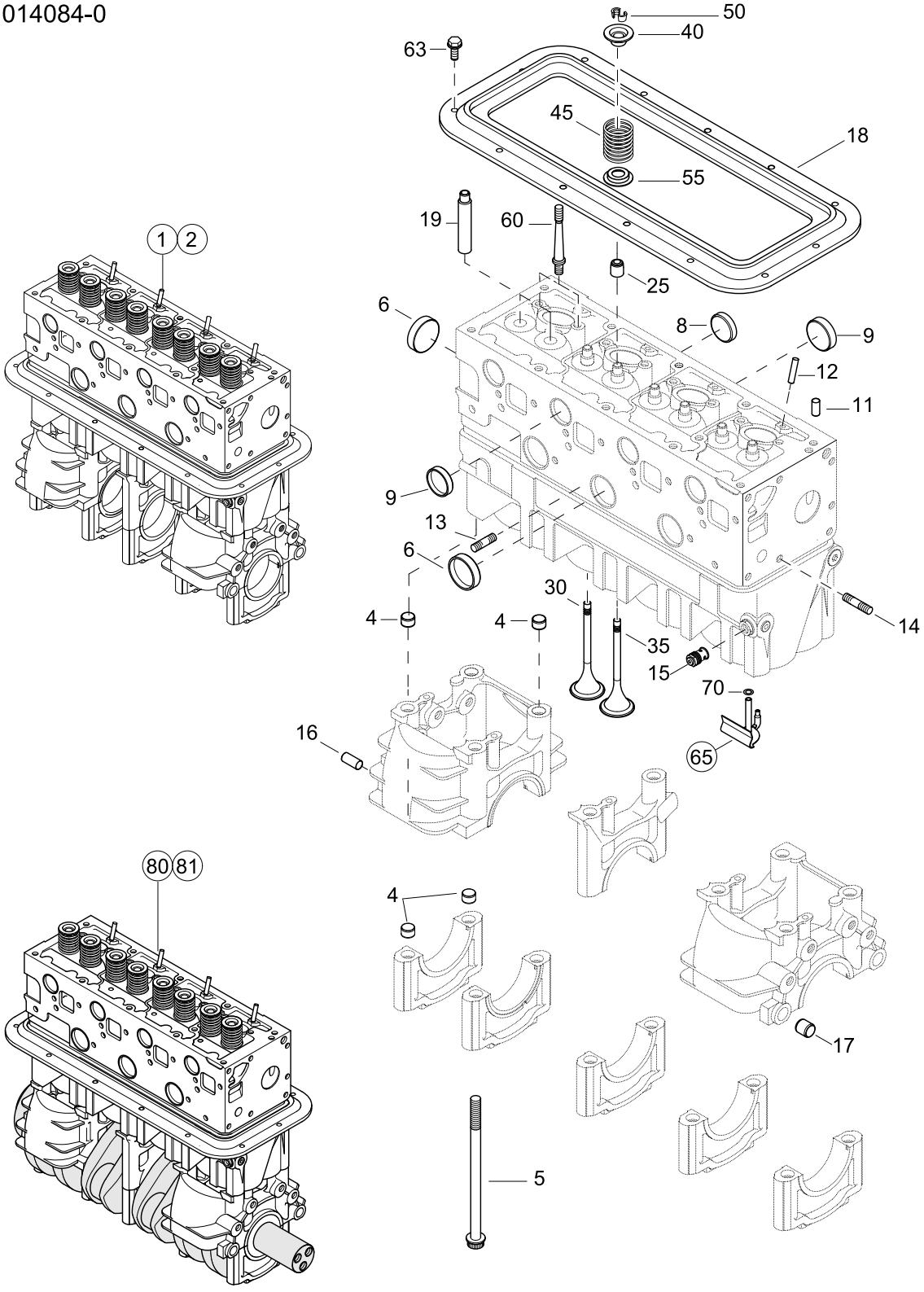

CRANKCASE

144 MARINE
TURBO DIESEL
+SOLAS

01014084-0

Pos.	Part.-No.	Qty	Designation	Step
1	MZ40084-0	1	CYLINDER BLOCK ASSY. MARINE (INCL. VALVES) —>48227163	.2
2	MZ40084-1	1	CYLINDER BLOCK ASSY. MARINE (INCL. VALVES) 48227164—>	.2
4	2172799-0	16	FITTING SLEEVE DM14.5 (TO M12)	..3
5	2174329-0	10	BOLT, MAIN BEARING	..3
6	2170309-0	4	CORE HOLE PLUG 40/8	..3
8	2172676-0	2	CORE HOLE PLUG 35/8	..3
9	2172170-0	3	CORE HOLE PLUG 28/7	..3
11	3901416-0	2	PARALLEL PIN ISO 2338-8m6x16-ST	..3
12	3901328-0	4	PARALLEL PIN ISO 2338-6m6x30-ST	..3
13	9000327-0	2	STUD DIN 939-M6x20-8.8-A2C	..3
14	3812435-0	1	STUD DIN 938-M8x35-8.8-A3C	..3
15	2178525-1	1	COOLING OIL VALVE ASSY.	..3
16	3901509-0	2	PARALLEL PIN ISO 2338-10m6x20-ST	..3
17	2170298-0	2	FITTING SLEEVE DM12.5 (TO M10)	..3
18	2040217-0	1	FRAME SEAL	..3
19	2172133-N	8	VALVE GUIDE	..3
25	2172096-1	8	VALVE STEM SEAL	..3
30	2177577-1	4	EXHAUST VALVE	..3
35	2177576-6	4	INTAKE VALVE	..3
40	2177349-0	8	VALVE-SPRING RETAINER	..3
45	2172362-0	8	VALVE SPRING	..3
50	2170171-0	16	VALVE COLLET	..3
55	2177415-0	8	VALVE SPRING WASHER	..3
60	2174321-1	8	STUD UNIT INJECTOR	.2
63	9000287-0	13	HEX.FLANGE BOLT EN 1665-M6x12-8.8	.2
65	2178478-0	4	SPRAYING NOZZLE ASSY	.2
70	2173533-0	4	O-RING 5,23 x 2,62	..3
80	MT40084-0	1	PARTIAL ENGINE (BLOCK, PISTON, CR.S. & VALVES) —>48227163	.2
81	MT40084-1	1	PARTIAL ENGINE (BLOCK, PISTON, CR.S. & VALVES) 48227164—>	.2

CRANKSHAFT, BEARING, DAMPER

01024084-0

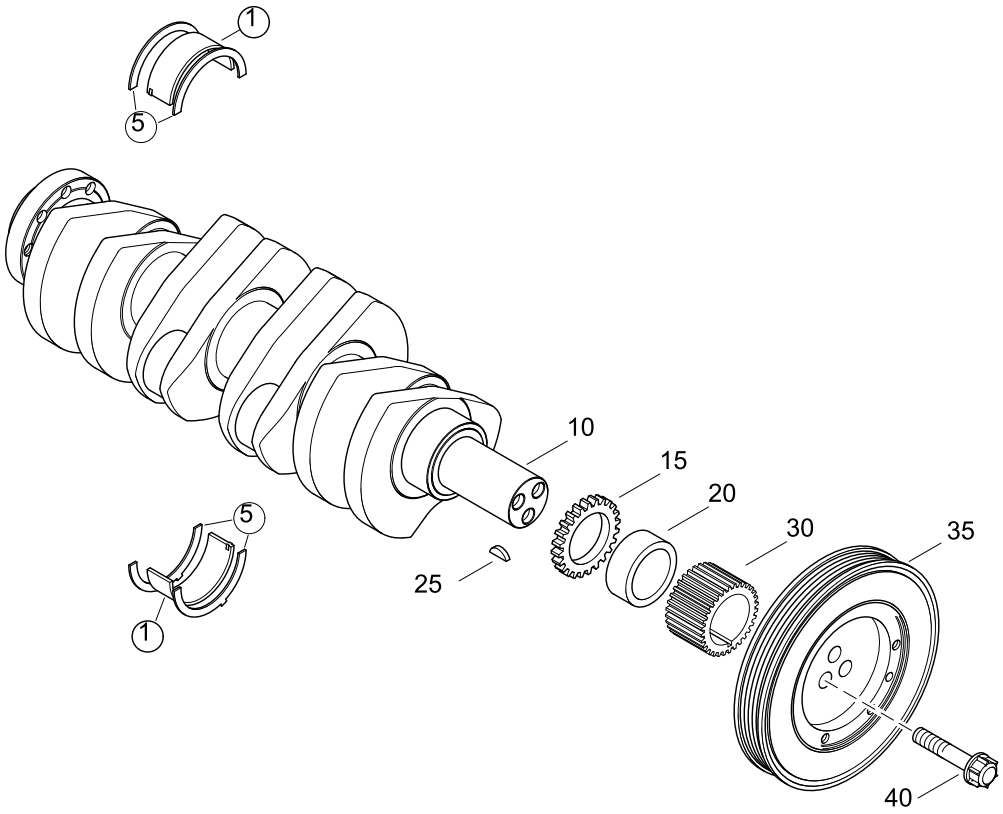

CRANKSHAFT, BEARING, DAMPER

144 MARINE
TURBO DIESEL
+SOLAS

01024084-0

Pos.	Part.-No.	Qty	Designation	Step
1	Z002003-0	5	MAIN BEARING ASSY. CRANKSHAFT	.2
5	Z002002-0	1	AXIAL BEARING ASSY. CRANKSHAFT	.2
10	Z002427-0	1	CRANKSHAFT 4 CYL. (SPARE PART)	.2
15	2172584-0	1	GEAR, OILPUMP DRIVE CRANKSHAFT	.2
20	2172316-0	1	BARREL RING	.2
25	3960012-0	1	WOODRUFFKEY DIN 6888-8x9	.2
30	2172770-0	1	SYNCHRONOUS BELT PULLEY CRANKSHAFT	.2
35	2203498-0	1	TORSIONAL VIBRATION DAMPER	.2
40	2205328-0	3	SCREW - VIBRATION DAMPER	.2

144 MARINE
TURBO DIESEL
+SOLAS

FLYWHEEL, FLYWHEELHOUSING

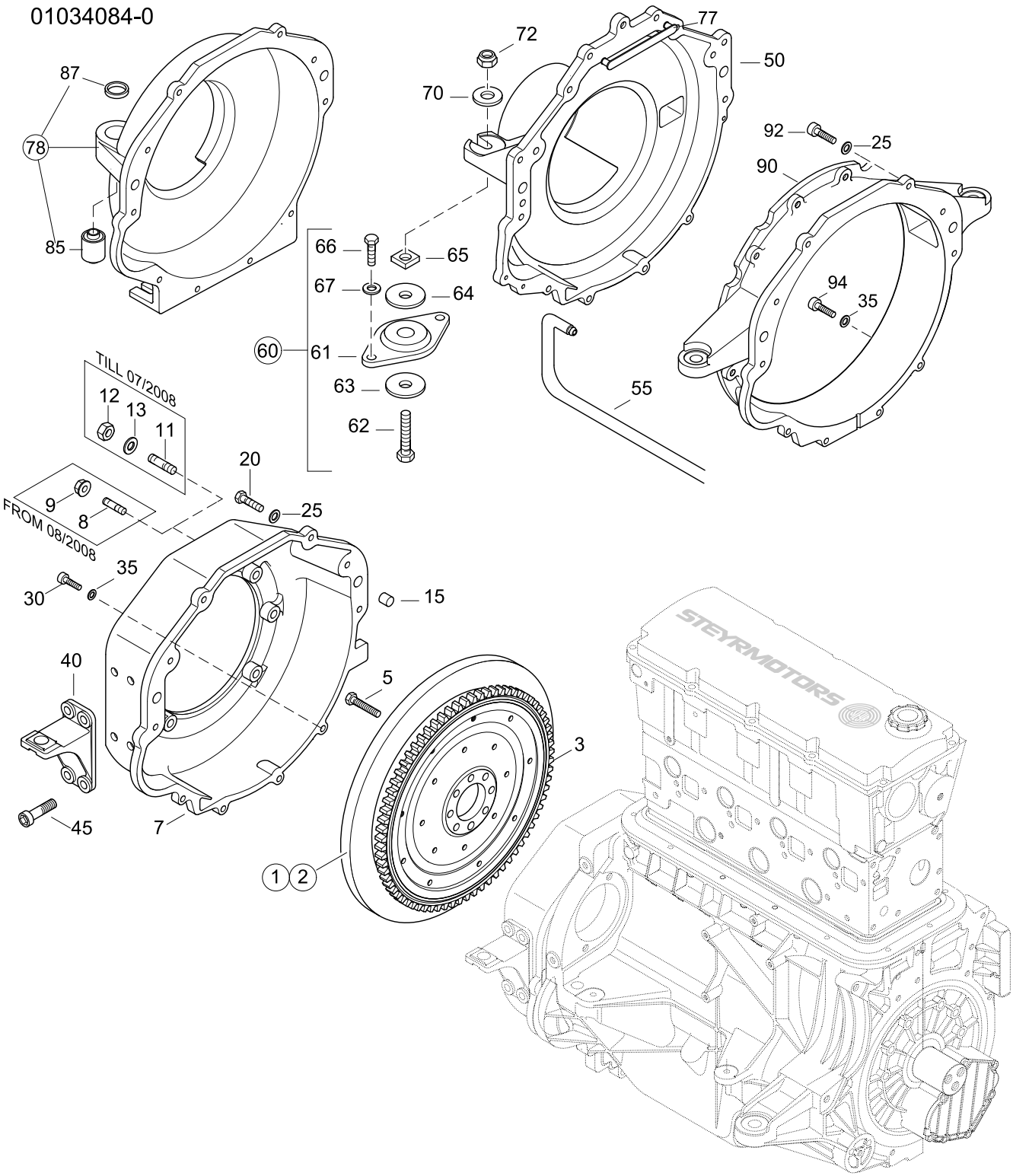

FLYWHEEL, FLYWHEELHOUSING

144 MARINE
TURBO DIESEL
+SOLAS

01034084-0

Pos.	Part.-No.	Qty	Designation	Step
1	2203739-1	1	FLYWHEEL ASSY. - DM56 —>48225999	.2
2	2203739-2	1	FLYWHEEL ASSY. - DM40 48226001—>	.2
3	2205031-0	1	STARTER RING GEAR, FLYWHEEL	..3
5	2174592-0	8	HEX. HEAD SCREW M10x30-12.9	.2
7	Z002165-0	1	SPARE FLYWHEEL HOUSING B/W FLANGE PAINTED	.2
8	9000371-0	6	STUD DIN 835-M10x25-8.8-A3C	.2
9	9000042-1	6	HEX.FLANGE NUT DIN 6923-M10-8-A3C	.2
11	9000082-0	6	STUD DIN 835-M12x25-8.8-A3C	.2
12	3871319-0	6	HEX.NUT ISO 4032-M12-8-A3C	.2
13	3930282-0	6	WASHER DIN 125-A13-140HV-A3C	.2
15	3900184-0	2	SPRING PIN, SLIGHT TYPE DIN 7346-16x22	.2
20	3862545-0	5	HEX.SOCK. HD.CAP SCR. DIN 912-M10x35-A2-70	.2
25	3930075-0	5	WASHER DIN 125 A10.5-140HV-A2	.2
30	3862433-0	4	HEX.SOCK. HD.CAP SCR. DIN 912-M8x30-A2-70	.2
35	3930103-0	4	WASHER DIN 125-8.4-140HV-A2	.2
40	2178722-1	2	BRACKET FLYWHEEL HOUSING	.2
45	9000081-0	8	HEX.SOCK.HD.CAP SCR. DIN 912-M12x35-8.8-A3C	.2
50	2203733-9	1	FLYWHEEL HOUSING OMC/VOLVO SX PAINTED	.2
55	O913787-0	1	HOSE-FLYWHEEL HOUSING	.2
60	O986712-0	1	SMALL PARTS REAR MOUNTS	.2
61	O983932-0	2	REAR MOUNT ASSY	..3
62	O318573-0	2	BOLT, REAR MOUNT	..3
63	O911780-0	2	WASHER-REAR MOUNT-LOWER	..3
64	O912889-0	2	WASHER REAR MOUNT	..3
65	O911776-0	2	SQUARE NUT-REAR MOUNT	..3
66	O309484-0	4	HEX. SCREW 3/8-16UNCx1-1/4"	..3
67	O319453-0	4	WASHER	..3
70	O911778-0	2	WASHER, REAR MOUNT	.2
72	O313623-0	2	LOCK NUT, REAR MOUNT	.2
77	2178504-0	2	COVER	.2

144 MARINE
TURBO DIESEL
+SOLAS

FLYWHEEL, FLYWHEELHOUSING

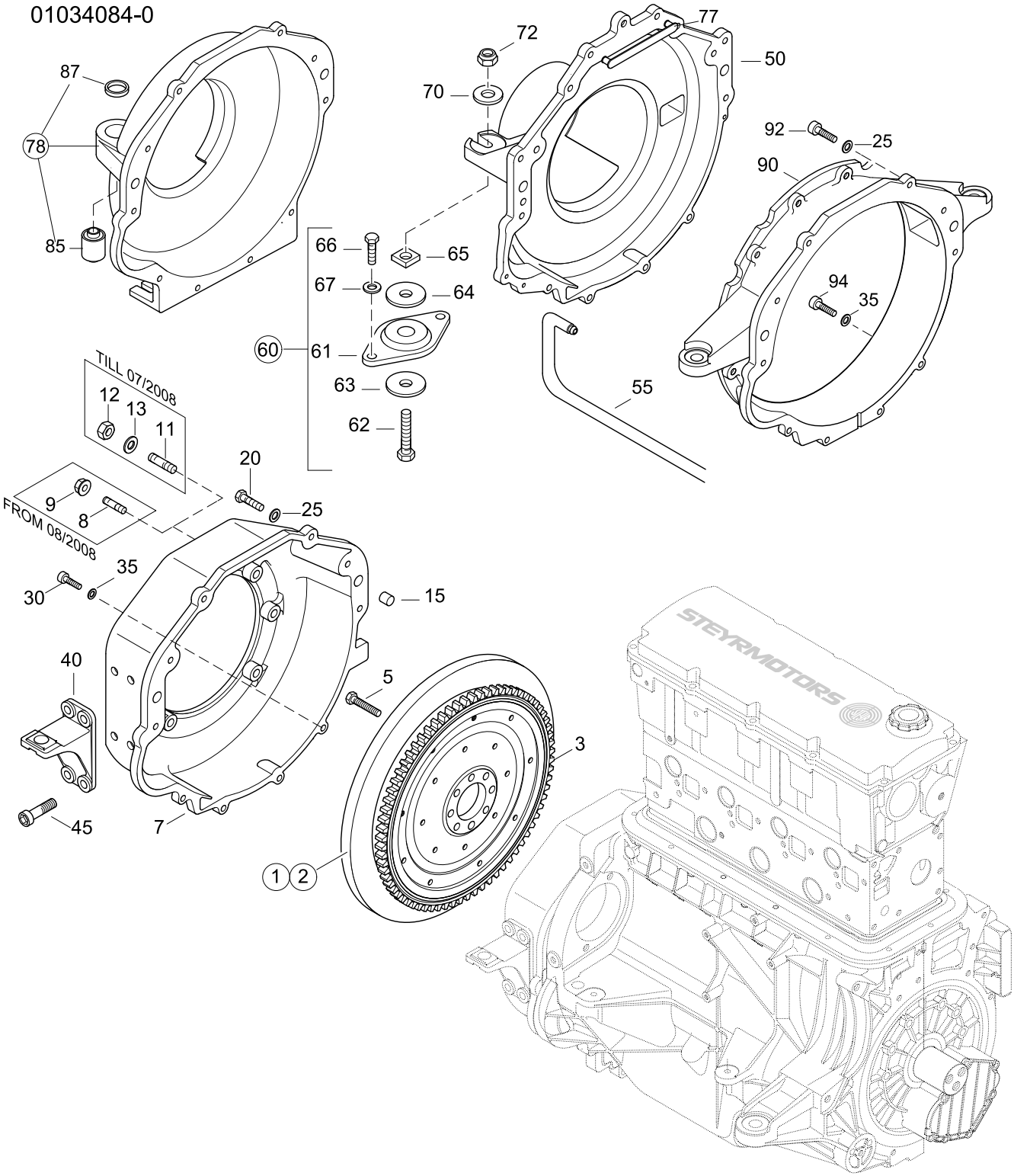

FLYWHEEL, FLYWHEELHOUSING

144 MARINE
TURBO DIESEL
+SOLAS

01034084-0

Pos.	Part.-No.	Qty	Designation	Step
78	2178833-M	1	HOUSING FLYWHEEL MERCURY ASSY PAINTED	.2
85	2178876-2	2	SINENT BLOCK F. FLY WHEEL HOUS ING ASYMMETRIC L=44,7	..3
87	2178877-0	2	WASHER-REAR MOUNT-LOWER	..3
90	2178052-9	1	HOUSING FLYWHEEL SAE 4 PAINTED	.2
92	3860149-0	5	HEX.SOCK. HD.CAP SCR. DIN 912-M10x40-8.8-A3C	.2
94	9000064-0	4	HEX.SOCK. HD.CAP SCR. DIN 912-M8x35-8.8-A3C	.2

PISTON, RINGS AND PIN, CONNECTION ROD

01044084-0

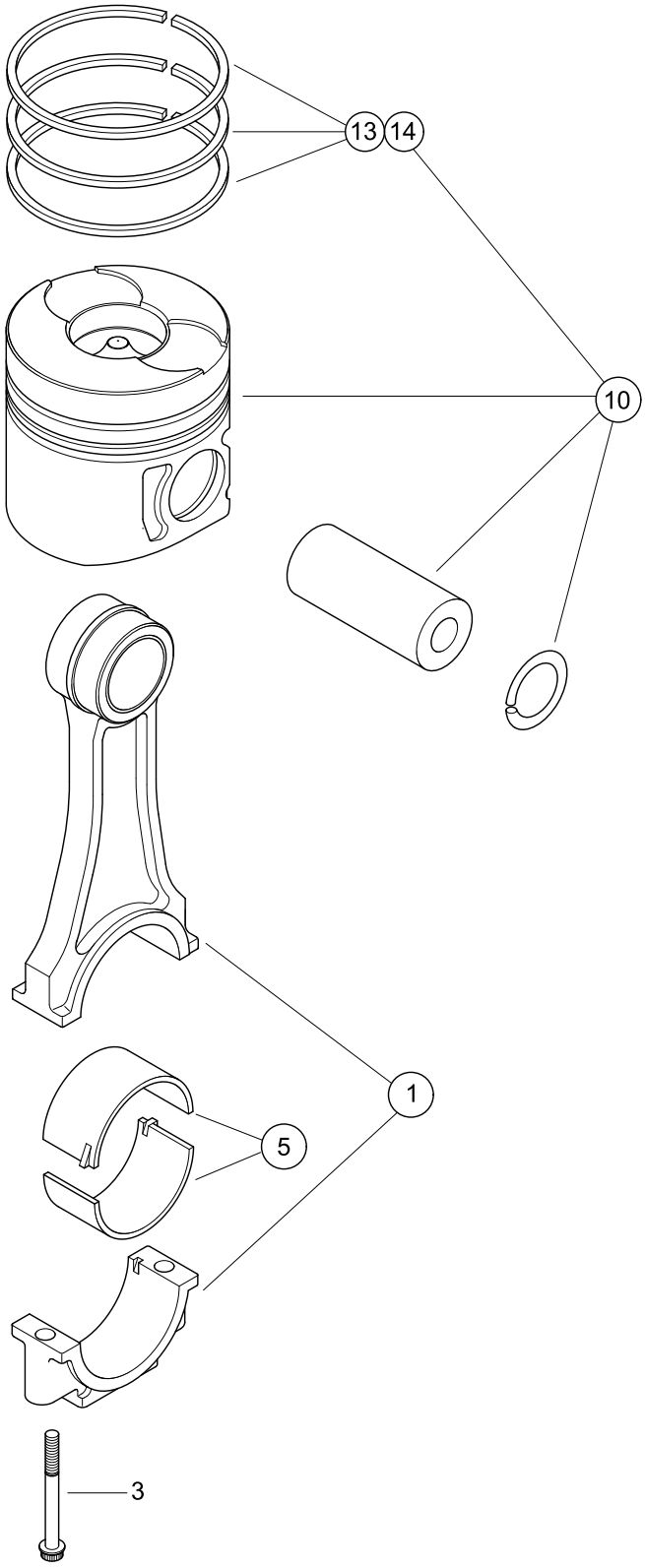

PISTON, RINGS AND PIN, CONNECTION ROD

144 MARINE
TURBO DIESEL
+SOLAS

01044084-0

Pos.	Part.-No.	Qty	Designation	Step
1	2178675-0	4	CONNECTING ROD ASSY.	.2
3	2178532-0	2	CONROD SCREW	..3
5	Z002055-1	4	BEARING ASSY. CONNECTING ROD	.2
10	Z002142-0	4	PISTON ASSY.	.2
13	Z002060-0	1	PISTON RING KIT (1 PER PISTON) —>48226118	..3
14	Z002060-2	1	PISTON RING KIT (1 PER PISTON) 48226119—>	..3

144 MARINE
TURBO DIESEL
+SOLAS

CAMSHAFT, HOUSING

01054084-0

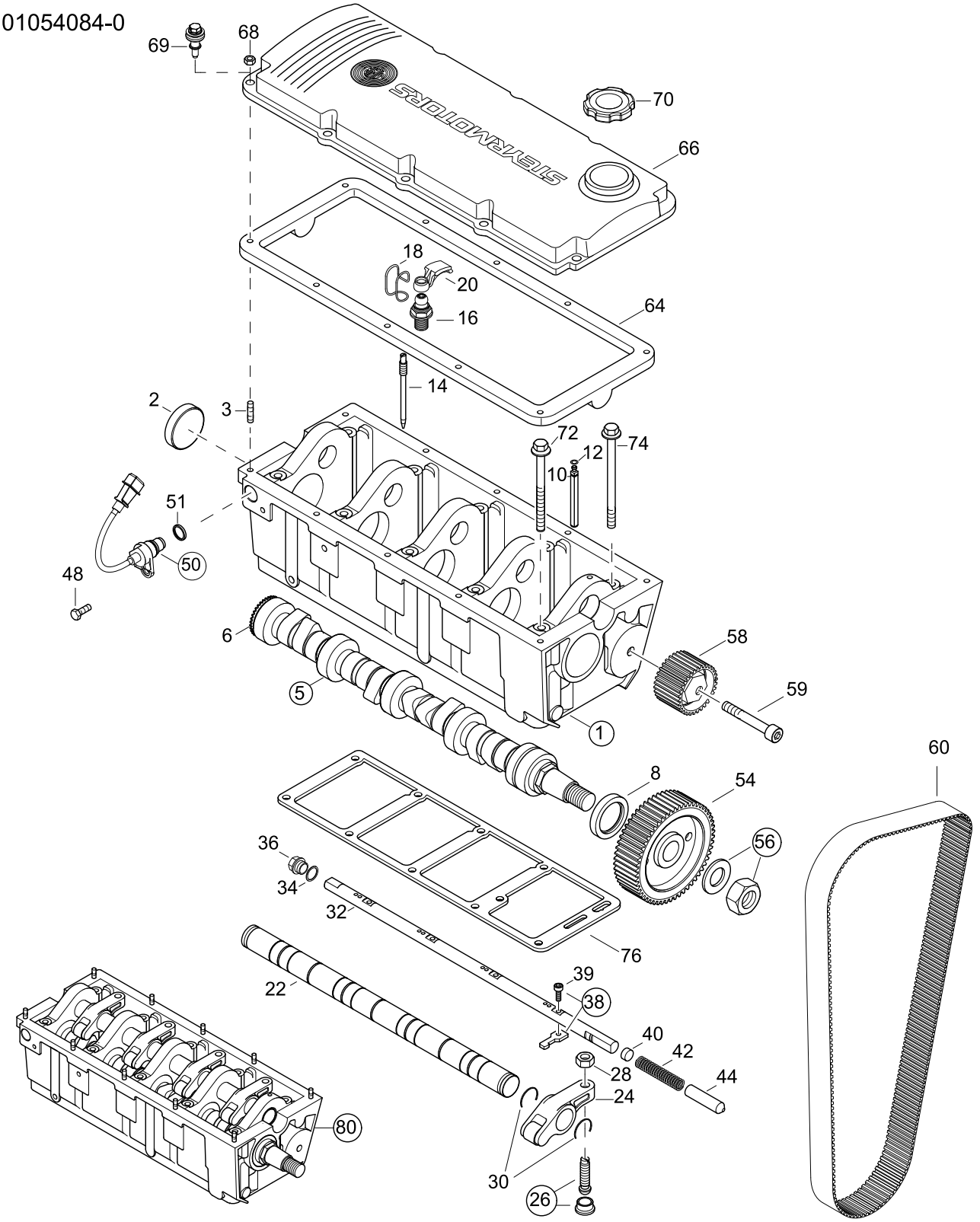

CAMSHAFT, HOUSING

144 MARINE
TURBO DIESEL
+SOLAS

01054084-0

Pos.	Part.-No.	Qty	Designation	Step
1	Z002407-0	1	CAMSHAFT HOUSING ASSY. (PAINTED)	.2
2	2178083-0	1	CORE HOLE PLUG 50-7	..3
3	2309101-0	10	STUD DIN 835-M6x25-A2-70 —>482300551	..3
5	2203267-6	1	CAMSHAFT ASSY.	.2
6	2203280-1	1	SENSOR DISK	..3
8	2172086-1	1	ROTARY SHAFT SEAL	.2
10	2178486-1	1	AXLE SUPPORT	.2
12	2178498-0	1	QUAD RING 1,78 x 5,28	.2
14	2177513-2	1	GUIDE PIN CONTROL RACK	.2
16	2174546-2	8	VALVE TAPPET ADJ. SCREW ASSY.	.2
18	2174552-0	8	RETAINING SPRING	.2
20	2177139-1	8	CAM FOLLOWER ASSY.	.2
22	2173694-1	1	ROCKER ARM SHAFT ASSY.	.2
24	Z002094-0	4	ROCKER ARM ASSY. (SPARE PART)	.2
26	Z002010-0	4	TAPPET ADJUSTER ASSY.	.2
28	3871310-0	4	HEX.NUT DIN 934-M10x1-8	.2
30	2174036-0	8	CRESCENT RING 28x1,5	.2
32	2203289-0	1	CONTROL ROD	.2
34	3098031-0	1	SEALING RING DIN 7603-A26x31-CU	.2
36	3962043-0	1	HEX.HD.SCR.PLUG DIN 7604-C-M26x1.5-ST-A3C	.2
38	Z002009-0	4	CONTROL LINK & BOLT	.2
39	3860140-0	1	HEX.SOCK. HD.CAP SCR. DIN 912-M5x20-LH-10.9	..3
40	2203337-0	1	SPACER	.2
42	2203338-0	1	SPRING, CONTROL ROD	.2
44	2203460-0	1	BOLT	.2
48	3800238-0	1	HEX.HD.SCR. ISO 4017-M6x12-A2-70	.2
50	2176734-2	1	REVOLUTION SENSOR	.2
51	2176729-0	1	O-RING 17,17 x 1,78	..3
54	2177642-0	1	TIMING BELT PULLEY CAMSHAFT	.2
56	Z002011-0	1	NUT & WASHER, CAMSHAFT PULLEY	.2
58	2178548-5	1	IDLER PULLEY ASSY.	.2

CAMSHAFT, HOUSING

01054084-0

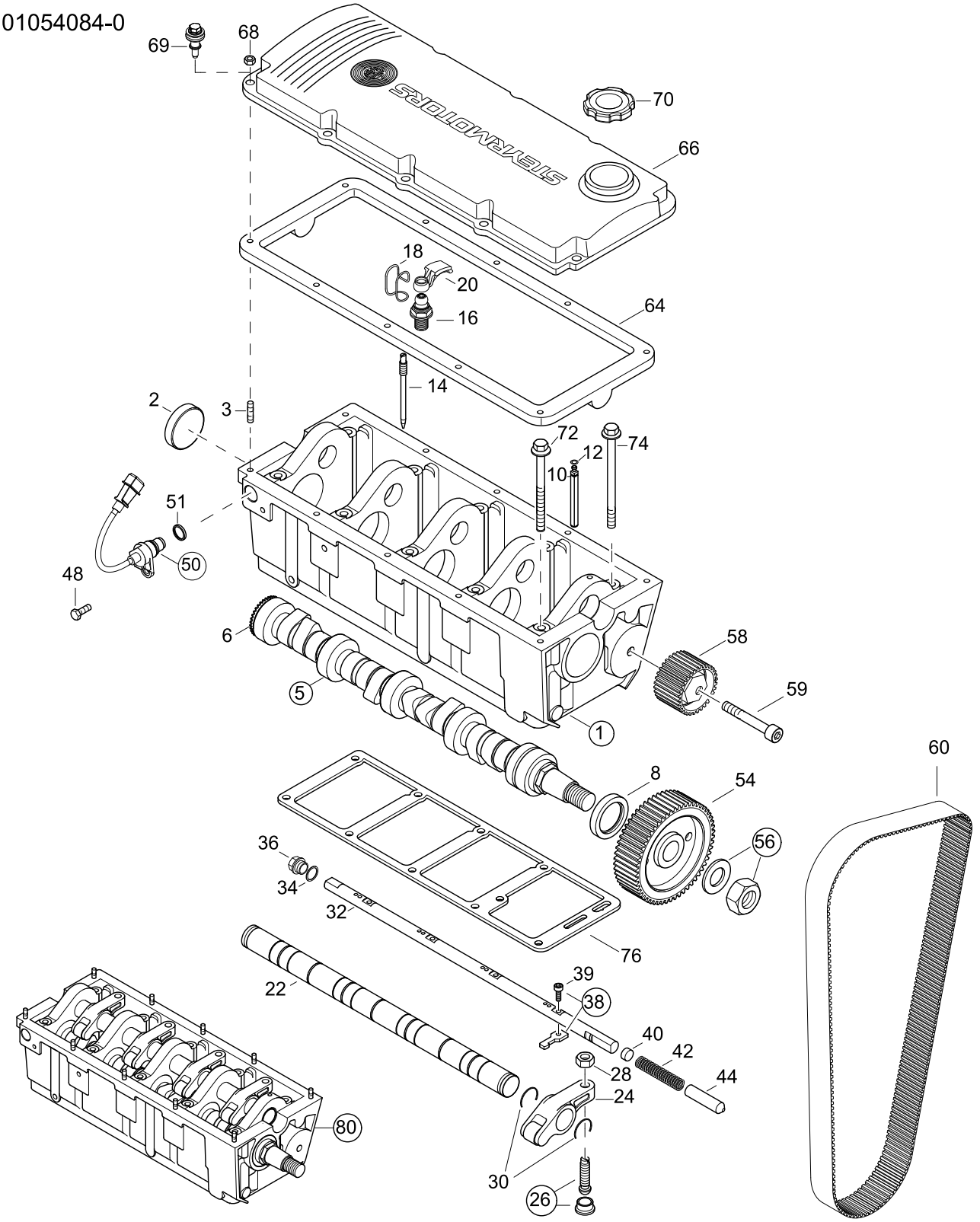

CAMSHAFT, HOUSING

144 MARINE
TURBO DIESEL
+SOLAS

01054084-0

Pos.	Part.-No.	Qty	Designation	Step
59	3860155-0	1	HEX.SOCK. HD.CAP SCR. DIN 912-M10x70-10.9-DAC A500	.2
60	2178073-1	1	TIMING BELT	.2
64	2040184-0	1	VALVE-COVER GASKET	.2
66	2203725-9	1	VALVE COVER, SILVER	.2
68	3880049-0	10	HEX.FLANGE NUT DIN 6923-M6-A2-70 —>482300551	.2
69	2040575-0	10	SCREW, COVER ACOUSTIC DECOUPLED 482300552—>	.2
70	2203509-0	1	FILLER CAP ENGINE OIL	.2
72	9000248-1	5	HEX.FLANGE BOLT EN 1665-M8x110-10.9-A2C	.2
74	9000249-1	5	HEX.FLANGE BOLT EN 1665-M8x130-10.9-A2C	.2
76	2203390-3	1	SEAL CAMSHAFT HSG - CYL.BLOCK	.2
80	Z002407-1	1	PART. CAMSHAFT HSG POS. 1 - 44 (PAINTED)	.2

OILPUMP, OILPIPE, OILPAN

01064084-0

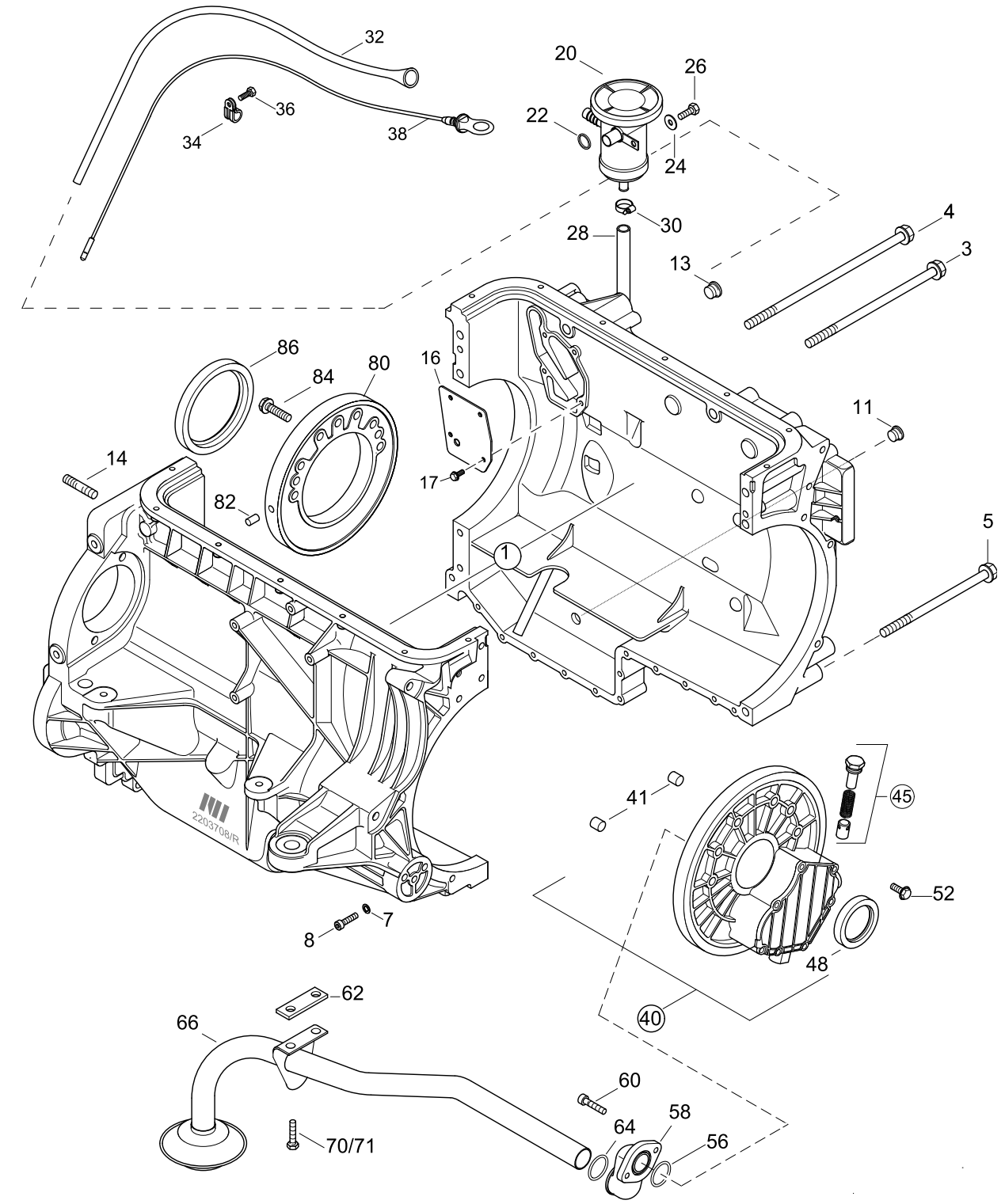

OILPUMP, OILPIPE, OILPAN

144 MARINE
TURBO DIESEL
+SOLAS

01064084-0

Pos.	Part.-No.	Qty	Designation	Step
1	Z002424-0	1	ENGINE HSG ASSY. - PAINTED (INCL.PIPE OIL-DIPSTICK)	.2
3	9000464-0	2	HEX.FLANGE BOLT EN 1665-M10x200-8.8-A3C	..3
4	9000463-0	2	HEX.FLANGE BOLT EN 1665-M10x250-8.8-A3C	..3
5	9000392-0	3	HEX.FLANGE BOLT EN 1665-M10x160-8.8-A3C	..3
7	3932008-0	11	SPRING WASHER DIN 137-B6-FST-A3C	..3
8	3862352-0	11	HEX.SOCK. HD.CAP SCR. DIN 912-M6x50-8.8-A2C	..3
11	9000588-0	1	HEX.SOCK.SCR.PLUG WITH RUBBER SEAL M16x1,5	..3
13	9000590-0	1	HEX.SOCK.SCR.PLUG WITH RUBBER SEAL M22x1,5	..3
14	9000000-0	1	STUD DIN 939-M8x25-A2-70	..3
16	2203738-0	1	COVER PRE-OIL-SEPERATOR	..3
17	9000287-0	4	HEX.FLANGE BOLT EN 1665-M6x12-8.8	..3
20	Z002051-0	1	OIL SEPARATOR	.2
22	2178310-1	1	O-RING 17 X 3,53	.2
24	9000012-0	1	WASHER LARGE SERIES DIN 9021-6.4-140HV-A2	.2
26	3800221-0	1	HEX.HD.SCR. ISO 4017-M6x20-A2-70	.2
28	2178287-0	1	HOSE, OIL DRAIN	.2
30	2174405-0	2	HOSE CLAMP 10-16/7,5	.2
32	2203757-0	1	PIPE OIL-DIPSTICK	.2
34	2178566-0	1	PIPE CLAMP DM15	.2
36	3800233-0	1	HEX.HD.SCR. ISO 4017-M6x16-A2-70	.2
38	2203751-0	1	OIL DIP STICK ASSY	.2
40	Z002429-0	1	OIL PUMP ASSY. (PAINTED)	.2
41	2170298-0	2	FITTING SLEEVE DM12.5 (TO M10)	..3
45	Z002005-6	1	RELIEF VALVE, OIL PUMP 4 CYL.	..3
48	2170276-1	1	ROTARY SHAFT SEAL CRANKS. FR. 55x70x8	..3
52	9000278-0	6	HEX.FLANGE BOLT EN 1665-M8x35-8.8-A2C	.2
56	2040153-0	1	O-RING 25.12x1.78	.2
58	2040004-Z	1	OIL SUCTION MANIFOLD	.2
60	3862320-0	2	HEX.SOCK. HD.CAP SCR. DIN 912-M6x20-8.8-A2C	.2
62	2203513-1	1	SPACER, PIPE OIL SUCTION —>48223068	.2
64	2173705-1	1	O-RING 21,82 x 3,53	.2

OILPUMP, OILPIPE, OILPAN

01064084-0

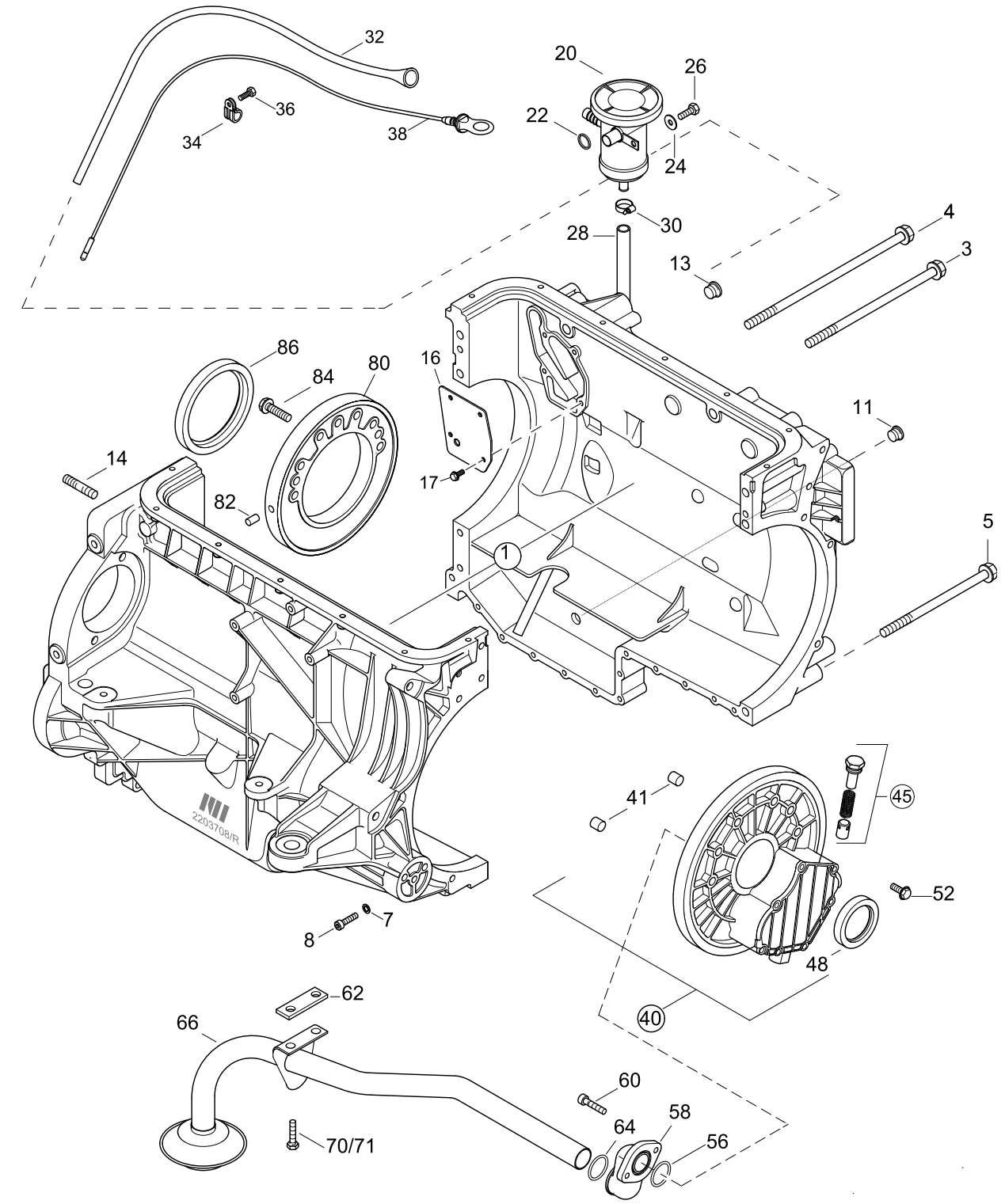

OILPUMP, OILPIPE, OILPAN

144 MARINE
TURBO DIESEL
+SOLAS

01064084-0

Pos.	Part.-No.	Qty	Designation	Step
66	2203718-1	1	PIPE OIL SUCTION	.2
70	3802321-0	2	HEX.HD.SCR. ISO 4017-M6x16-8.8-A2C —>48223068	.2
71	9000287-0	2	HEX.FLANGE BOLT EN 1665-M6x12-8.8 48223069—>	.2
80	2172855-1	1	RING CARRIER, REAR	.2
82	3901416-0	1	PARALLEL PIN ISO 2338-8m6x16-ST	.2
84	9000278-0	7	HEX.FLANGE BOLT EN 1665-M8x35-8.8-A2C	.2
86	2172289-1	1	ROTARY SHAFT SEAL, CR.S. REAR	.2

144 MARINE
TURBO DIESEL
+SOLAS

INTERCOOLER

01084084-0

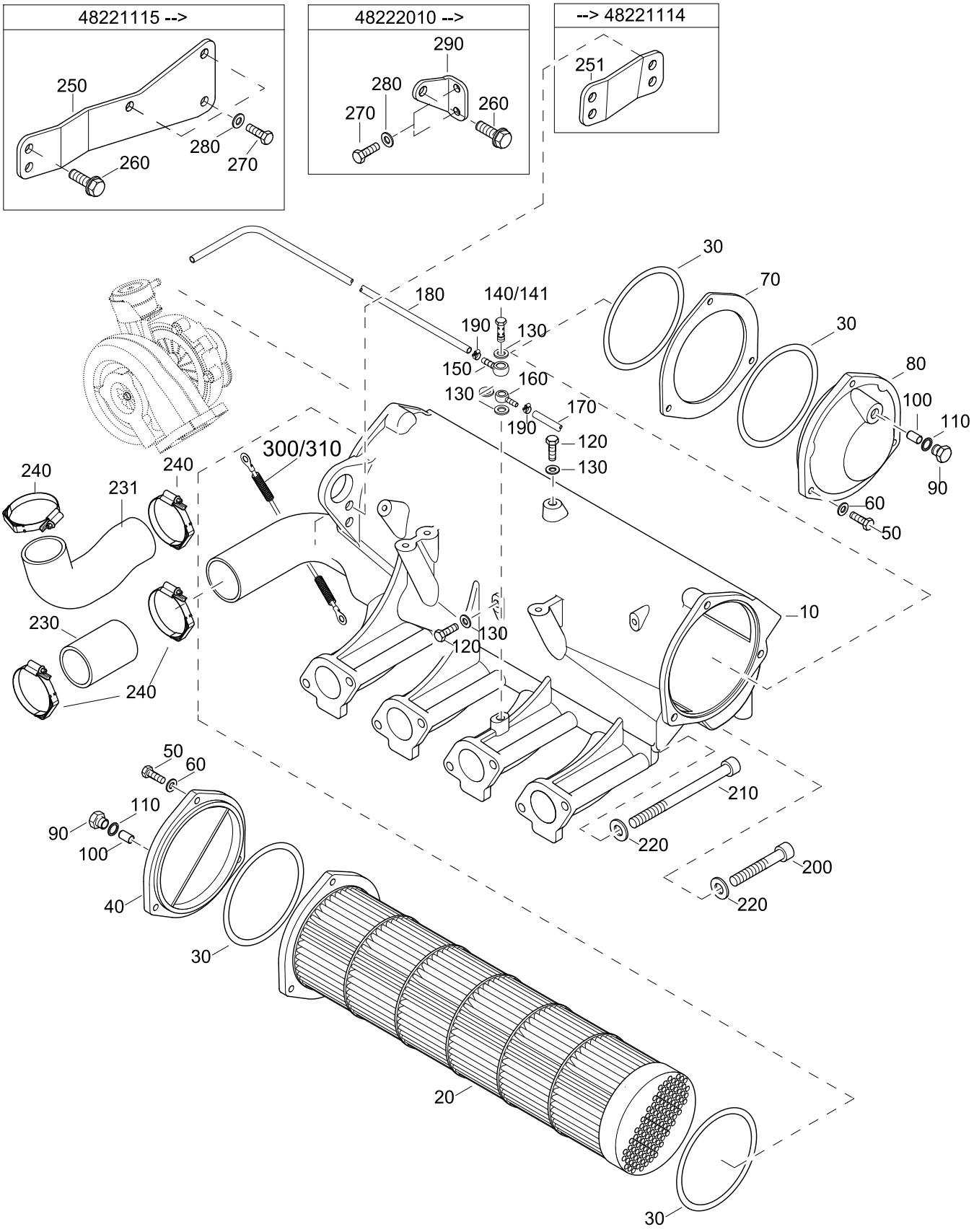

INTERCOOLER

144 MARINE
TURBO DIESEL
+SOLAS

01084084-0

Pos.	Part.-No.	Qty	Designation	Step
10	2203706-9	1	INTAKE MANIFOLD, PAINTED	.2
20	2177593-1	1	INTERCOOLER	.2
30	2178483-0	4	O-RING 120,24 x 3,53	.2
40	2178415-8	1	COVER INTERCOOLER REAR,PAINTED	.2
50	9000064-0	6	HEX.SOCK. HD.CAP SCR. DIN 912-M8x35-8.8-A3C	.2
60	3930261-0	6	WASHER DIN 125-A8.4-140HV-A3C	.2
70	2174270-0	1	SPACER, INTERCOOLER	.2
80	2174261-9	1	COVER INTERCOOLER FRONT, PAINTED	.2
90	2178412-1	2	PLUG M18x1.5	.2
100	2178413-1	2	ZINC ANODE	.2
110	3098020-0	2	SEALING RING DIN 7603-A18x22-CU	.2
120	3802411-0	2	HEX.HD.SCR. ISO 4017-M8x16 A4-70	.2
130	3098009-0	4	SEALING RING DIN 7603-A8x14-CU	.2
140	2203794-0	1	DUO HOLLOW SCREW M8x1	.2
141	11869	1	HOLLOW SCREW M8x1 (ONLY FOR MO144M38)	.2
150	2203795-0	1	BANJO 8-4	.2
160	2203796-0	1	BANJO NUT DM8	.2
170	2203665-1	1	HOSE	.2
180	2178552-2	1	HOSE	.2
190	2178893-0	2	HOSE CLAMP 8-12/7,5	.2
200	3862447-0	4	HEX.SOCK. HD.CAP SCR. DIN 912-M8x45-8.8-A2C	.2
210	9000312-0	4	HEX.SOCK. HD.CAP SCR. DIN 912-M8x120-8.8-A2C	.2
220	3930261-0	8	WASHER DIN 125-A8.4-140HV-A3C	.2
230	2203773-0	1	HOSE, TURBO CHARGER	.2
231	2203830-0	1	CHARGE AIR HOSE (ONLY FOR MO144M38)	.2
240	2179050-0	2	HOSE CLAMP WITH SPRING 40-60/9	.2
250	2203789-1	1	SHACKLE 48221115—>	.2
251	2203789-0	1	SHACKLE —>48221114	.2
260	9000271-0	3	HEX.FLANGE BOLT EN 1665-M8x25-10.9	.2
270	3800233-0	5	HEX.HD.SCR. ISO 4017-M6x16-A2-70	.2
280	3930070-0	5	WASHER DIN 125-6-140HV-A2	.2

144 MARINE
TURBO DIESEL
+SOLAS

INTERCOOLER

01084084-0

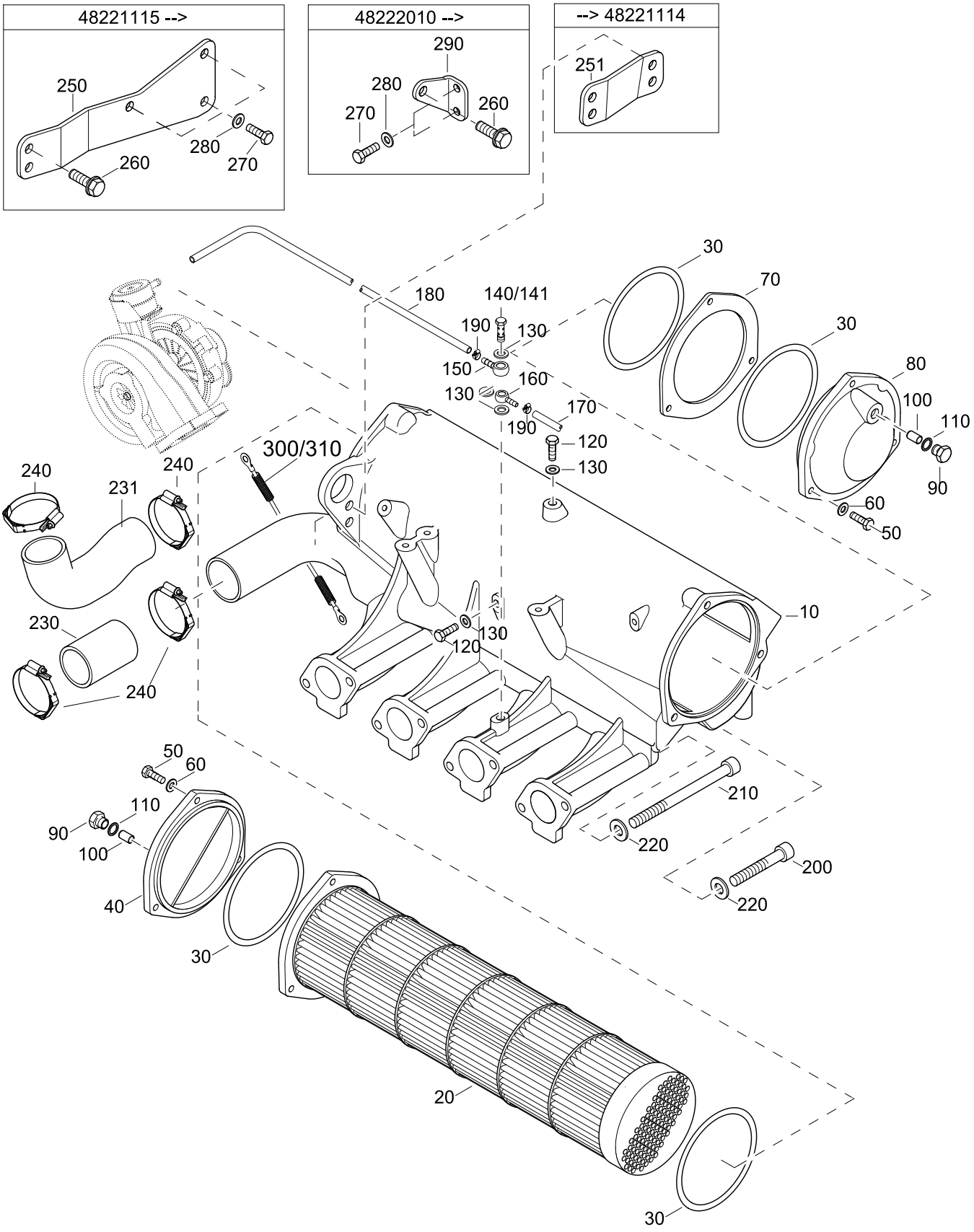

INTERCOOLER

144 MARINE
TURBO DIESEL
+SOLAS

01084084-0

Pos.	Part.-No.	Qty	Designation	Step
290	2203789-2	1	SHACKLE 48222010—>	.2
300	2206210-1	1	GROUND WIRE ASSY. —>482290263	.2
310	2178968-0	1	GROUND WIRE ASSY. 482290264—>	.2

144 MARINE TURBO DIESEL +SOLAS

POWER TAKE OFF FRONT

01094084-0

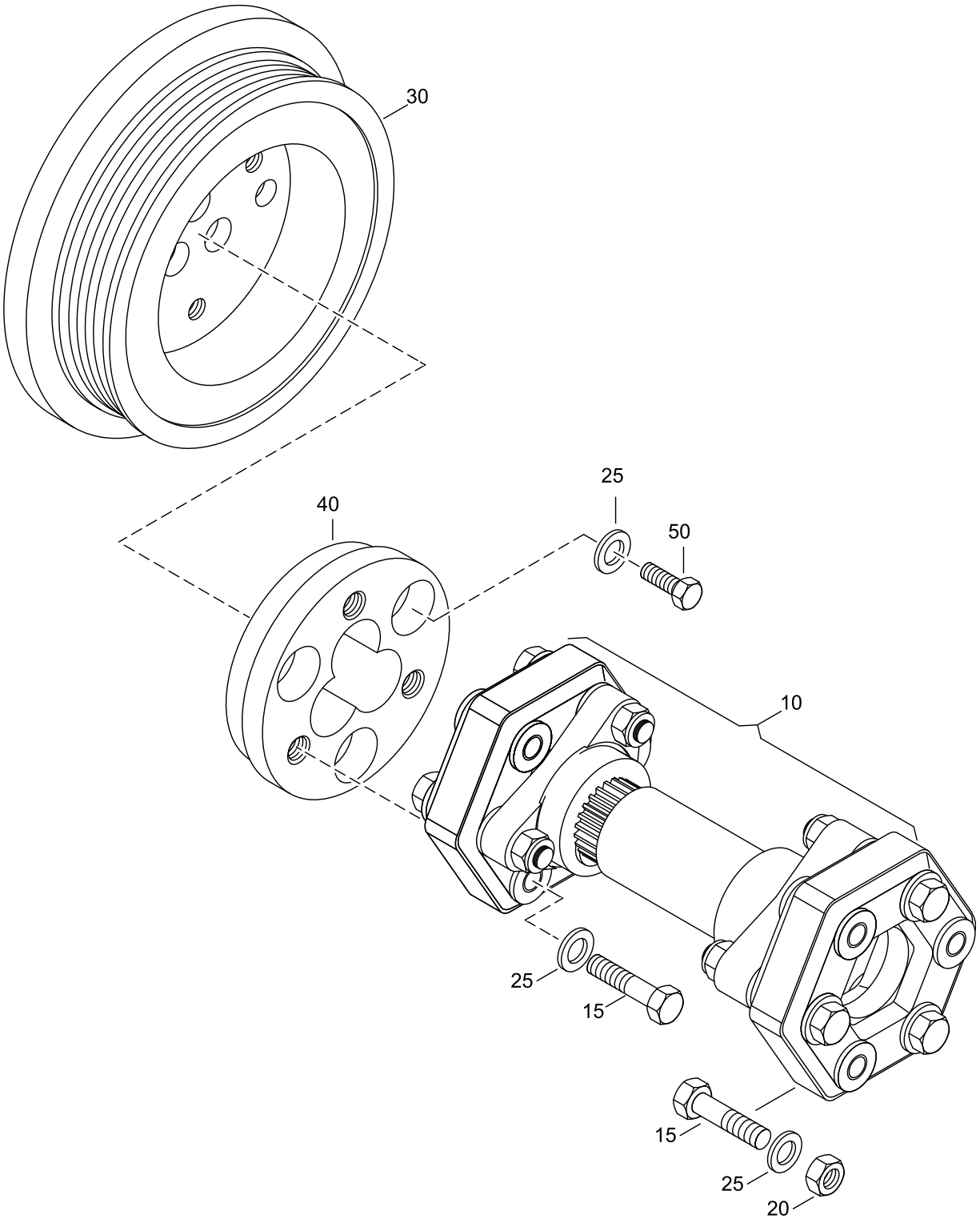

POWER TAKE OFF FRONT

144 MARINE
TURBO DIESEL
+SOLAS

01094084-0

Pos.	Part.-No.	Qty	Designation	Step
10	2205329-0	1	ELASTIC SHAFT L=130-158	.2
15	3802451-0	6	HEX.HD.SCR. ISO 4017-M8x50-8.8-A2C	.2
20	3888722-0	3	HEX.NUT,PREVG.TORQUE DIN 985-M8-A2C	.2
25	3930103-0	9	WASHER DIN 125-8.4-140HV-A2	.2
30	2203779-0	1	TORSIONAL VIBRATION DAMPER-PTO	.2
40	2203787-0	1	FLANGE - PTO	.2
50	3802432-0	3	HEX.HD.SCR. ISO 4017-M8x30-8.8-A2C	.2

144 MARINE
TURBO DIESEL
+SOLAS

OILCOOLER

01134084-0

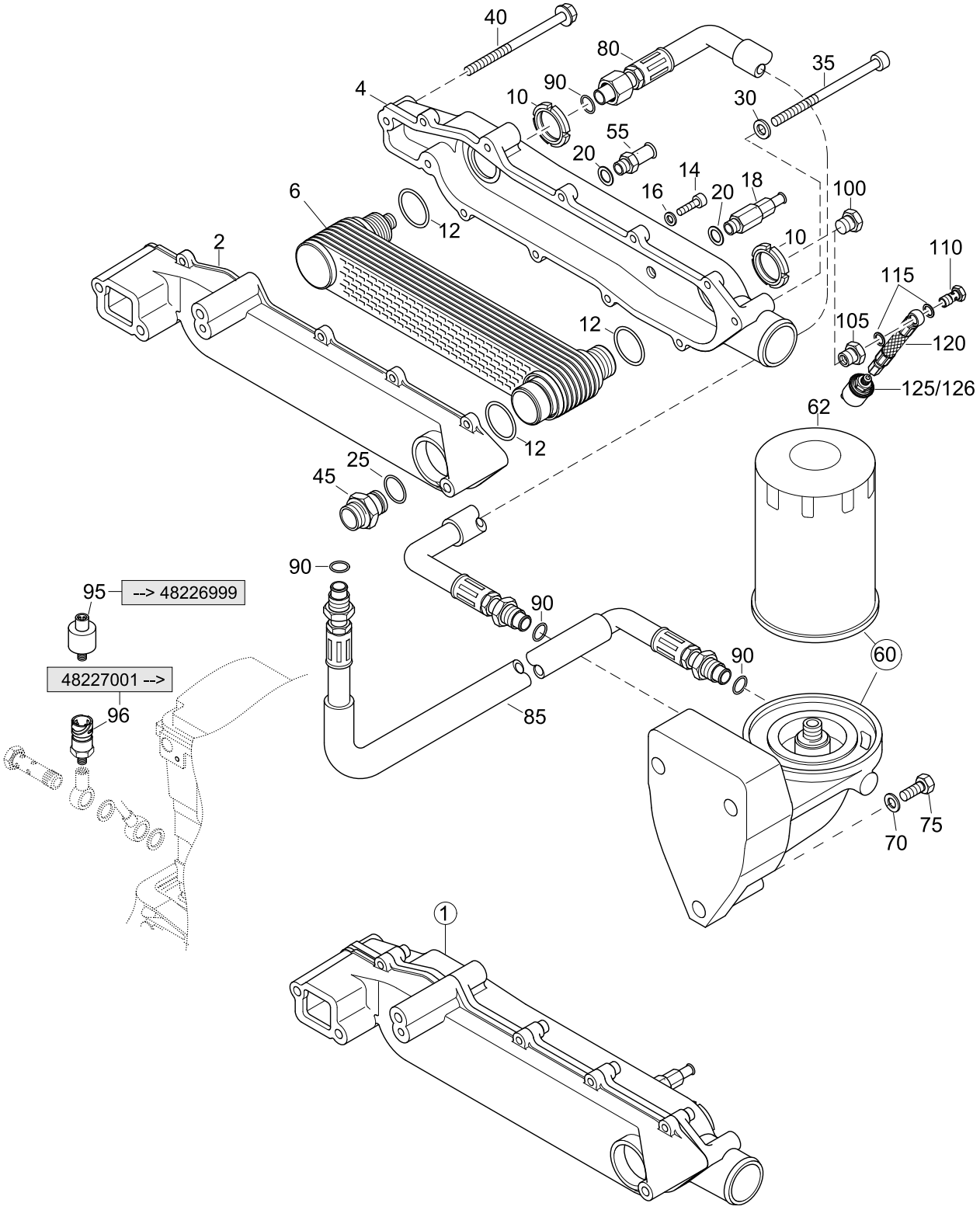

OILCOOLER

144 MARINE
TURBO DIESEL
+SOLAS

01134084-0

Pos.	Part.-No.	Qty	Designation	Step
1	Z002402-0	1	OIL COOLER ASSY. 4 CYL. MARINE (PAINTED)	.2
2	2203260-9	1	HOUSING OIL COOLER, PAINTED	..3
4	2203262-9	1	COVER OIL COOLER, PAINTED	..3
6	2178632-1	1	OIL COOLER CARTRIDGE	..3
10	9000315-0	2	GROOVE NUT DIN 70852-M30x1.5-14H-A3C	..3
12	2177741-0	3	O-RING 32,92 x 3,53	..3
14	3862327-0	7	HEX.SOCK. HD.CAP SCR. DIN 912-M6x25-8.8-A2C	..3
16	3932008-0	7	SPRING WASHER DIN 137-B6-FST-A3C	..3
18	2178598-0	1	DRAIN COCK ASSY.	..3
20	9000786-0	1	DICHTRING DIN 7603-A12x16-CU	..3
25	2177742-1	1	O-RING 25 x 3,53	.2
30	3930103-0	2	WASHER DIN 125-8.4-140HV-A2	.2
35	9000312-0	2	HEX.SOCK. HD.CAP SCR. DIN 912-M8x120-8.8-A2C	.2
40	9000248-1	3	HEX.FLANGE BOLT EN 1665-M8x110-10.9-A2C	.2
45	Z002127-0	1	SPARE P. BUSHING, OIL COOLER	.2
55	2178698-0	1	NIPPLE HEATER ON OILCOOLER (ACCESSORY)	.2
60	Z002403-0	1	OIL FILTER & COVER ASSY. PAINTED	.2
62	2178582-1	1	OIL FILTER CARTRIDGE	..3
70	3930103-0	3	WASHER DIN 125-8.4-140HV-A2	.2
75	3862452-0	3	HEX.SOCK. HD.CAP SCR. DIN 912-M8x50-8.8-A2C	.2
80	2203740-0	1	HOSE, FILTER-OIL COOLER	.2
85	2203741-0	1	HOSE, OILPUMP TO FILTER	.2
90	2176170-0	4	O-RING 15 x 2	.2
95	2206122-0	1	OIL PRESSURE SENSOR —>48226999	.2
96	2206305-0	1	PRESSURE SENSOR 1/8-27 NPT 48227001—>	.2
100	9000290-0	1	SCREW PLUG 1/4-18 NPTF	.2
105	2203819-0	1	SCREW PLUG 1/4-18 NPTF - M10x1	.2
110	9000010-1	1	HOLLOW SCREW M10x1	.2
115	3098011-0	2	SEALING RING DIN 7603-A10x16-CU	.2
120	Z002405-0	1	HOSE OIL PRESSURE SENSOR (ACCESSORY)	.2
125	Z002640-0	1	OIL PRESSURE SENSOR 2 WAY (ACCESSORY)	.2

144 MARINE
TURBO DIESEL
+SOLAS

OILCOOLER

01134084-0

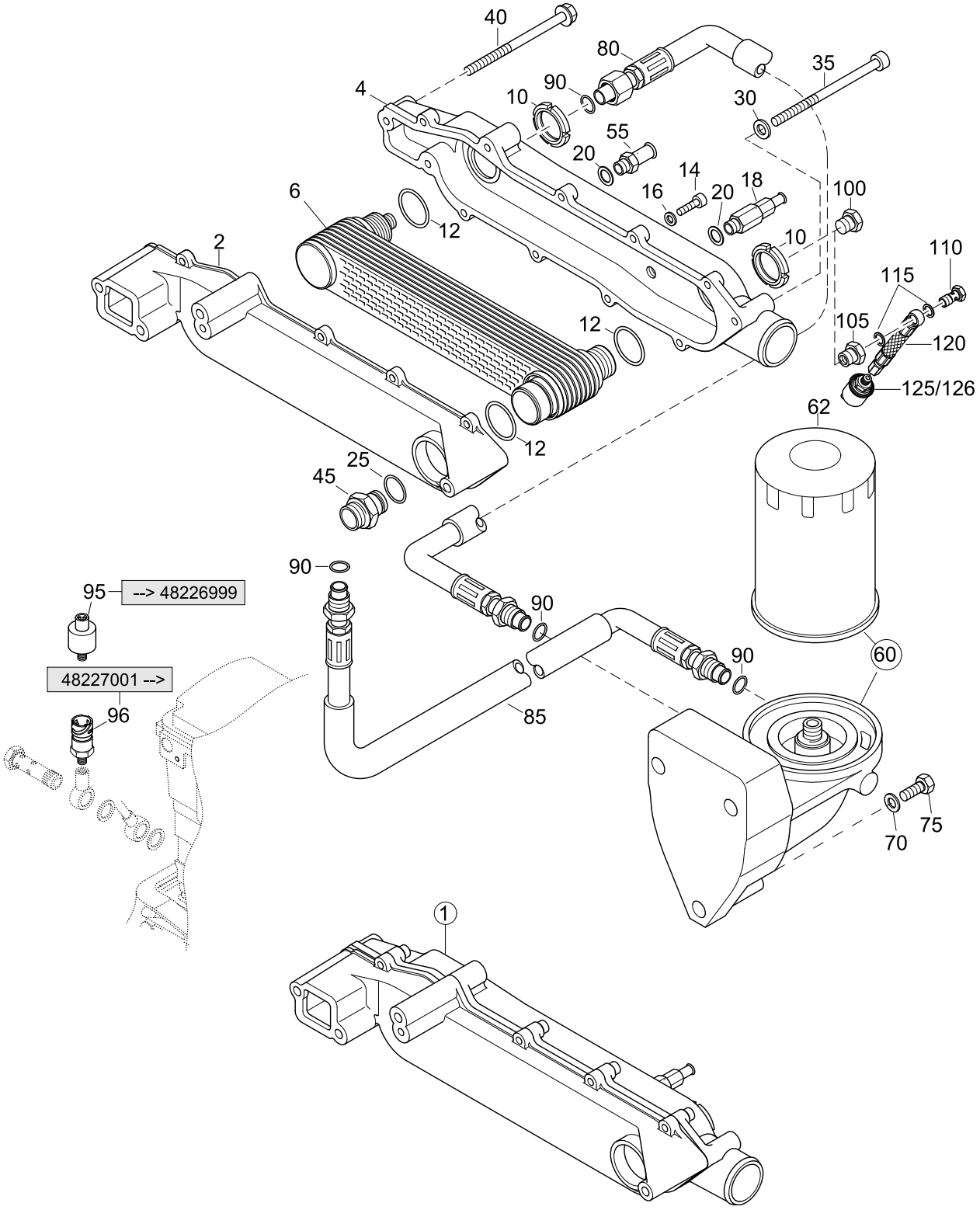

OILCOOLER

144 MARINE
TURBO DIESEL
+SOLAS

01134084-0

Pos.	Part.-No.	Qty	Designation	Step
126	Z002641-0	1	OIL PRESSURE SENSOR 2 WAY TWIN INSTR.PANEL (ACC)	.2

144 MARINE TURBO DIESEL +SOLAS

EXHAUST, HEAT EXCHANGER, GASKET

01144084-0

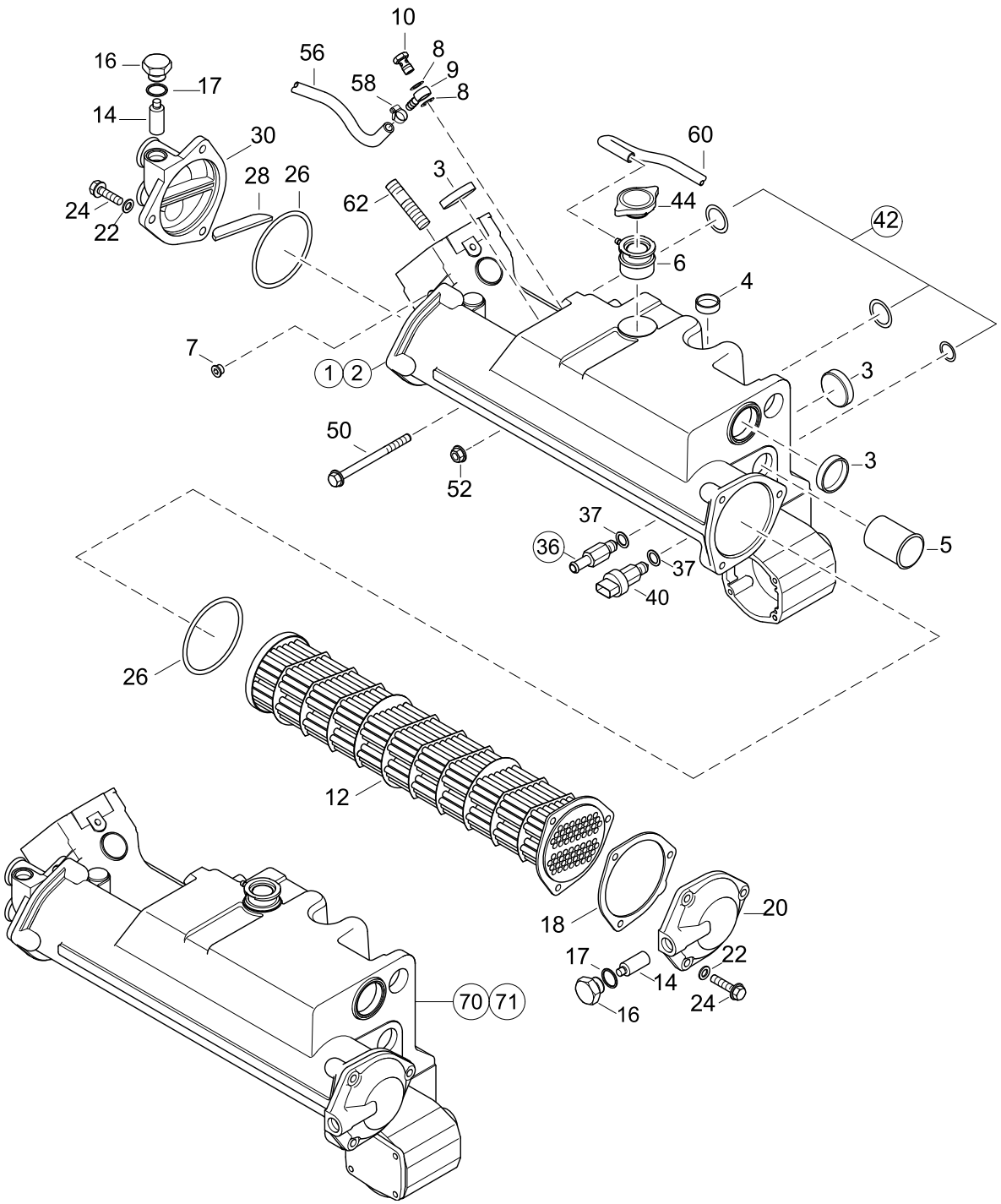

EXHAUST, HEAT EXCHANGER, GASKET

144 MARINE
TURBO DIESEL
+SOLAS

01144084-0

Pos.	Part.-No.	Qty	Designation	Step
1	2203703-0	1	EXHAUST MANIFOLD ASSY. PAINTED —>48227163	.2
2	Z002433-0	1	EXHAUST MANIFOLD ASSY. PAINTED 48227164—>	.2
3	2178112-0	3	CORE HOLE PLUG 40/8	..3
4	Z002048-0	9	CORE PLUG WITH O-RING	..3
5	2174617-0	1	PIPE FITTING	..3
6	2178331-0	1	FILLER NECK	..3
7	2170217-0	1	SCREW PLUG M10x1	..3
8	3098011-0	4	SEALING RING DIN 7603-A10x16-CU	.2
9	2174384-1	2	BANJO DN6 DIN 7642	.2
10	9000010-1	2	HOLLOW SCREW M10x1 DIN 7643-6-3-S	.2
12	2203704-0	1	HEATEXCHANGER	.2
14	2178413-1	2	ZINC ANODE	.2
16	Z002017-0	2	PLUG & SEAL FOR ZINC-ANODE	.2
17	3098020-0	1	SEALING RING DIN 7603-A18x22-CU	..3
18	2174155-1	1	GASKET, HEAT EXCHANGER COVER	.2
20	2173510-9	1	COVER HEAT EXCHANGER, FRONT PAINTED	.2
24	9000431-0	6	HEX.FLANGE BOLT EN 1665-M8x30-10.9-DAC	.2
26	2173636-0	2	O-RING 90x3	.2
28	2174073-0	1	SEAL FOR HEAT EXCHANGER COVER	.2
30	2177450-9	1	COVER HEAT EXCHANGER REAR, PAINTED	.2
36	2178598-0	1	DRAIN COCK ASSY.	.2
37	3098013-0	2	SEALING RING DIN 7603-A12x18-CU	.2
40	2174623-3	1	COOLANT TEMPERATURE SENSOR	.2
42	Z002489-0	1	SEAL KIT, EXH.MANIF - BLOCK 4 CYL.MARINE (O-RINGS)	.2
44	2174693-7	1	FILLER CAP ENGINE COOLANT	.2
50	9000248-1	8	HEX.FLANGE BOLT EN 1665-M8x110-10.9-A2C	.2
52	3880049-0	2	HEX.FLANGE NUT DIN 6923-M6-A2-70	.2
56	2178552-1	1	HOSE L=275mm	.2
58	2174405-0	2	HOSE CLAMP 10-16/7,5 EN 10088-1	.2
60	2174682-0	1	HOSE, OVERFLOW	.2
62	2203778-0	4	STUD HEAT-RESISTANT STEEL DIN 940-M8FOx25	.2

144 MARINE TURBO DIESEL +SOLAS

EXHAUST, HEAT EXCHANGER, GASKET

01144084-0

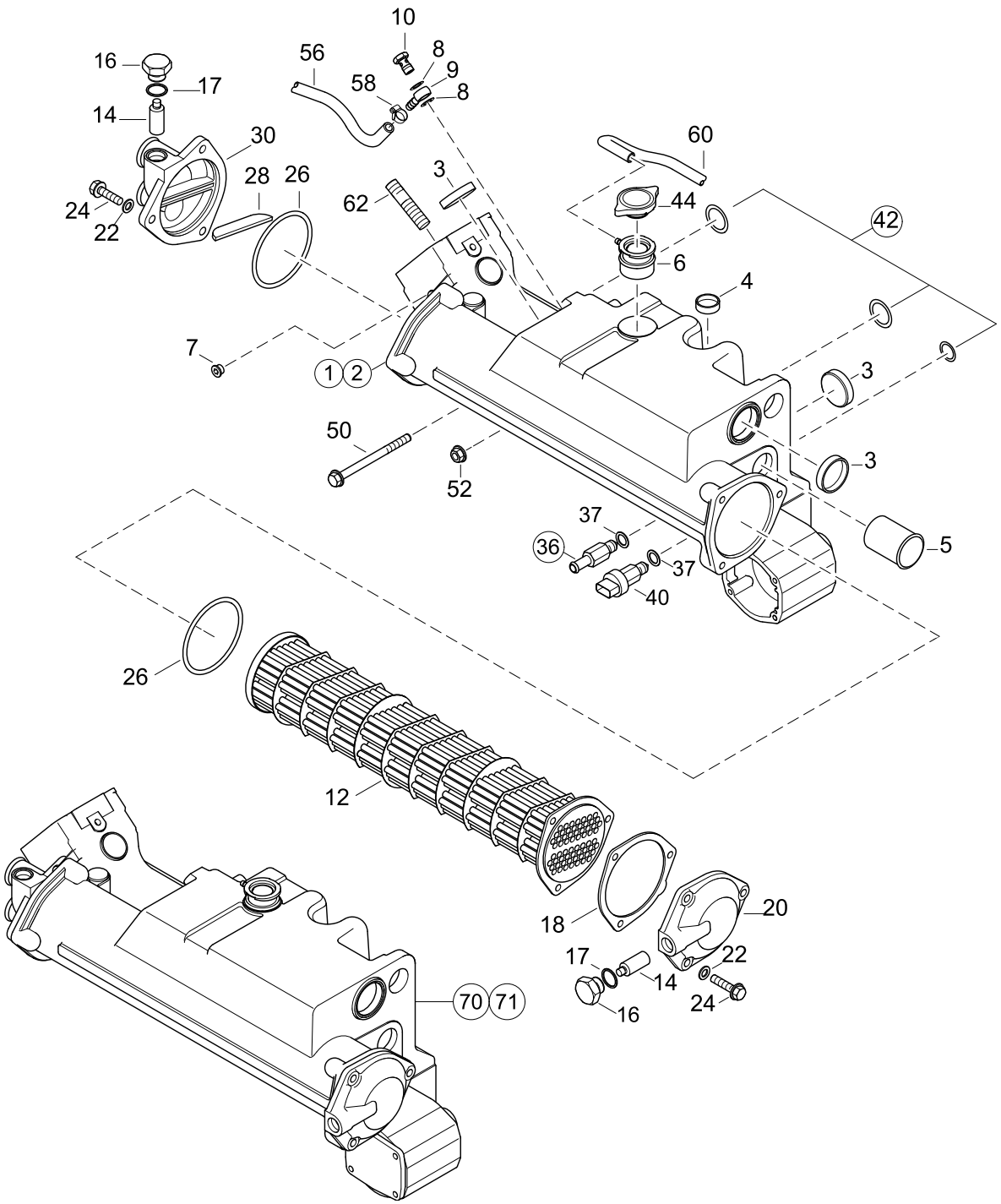

EXHAUST, HEAT EXCHANGER, GASKET

144 MARINE
TURBO DIESEL
+SOLAS

01144084-0

Pos.	Part.-No.	Qty	Designation	Step
70	Z002408-0	1	EXH. MANIFOLD COMPLETE (PAINTED) —>48227163	.2
71	Z002408-1	1	EXH. MANIFOLD COMPLETE (PAINTED) 48227164—>	.2

COUPLER - SMALL FLYWHEEL

02004084-0

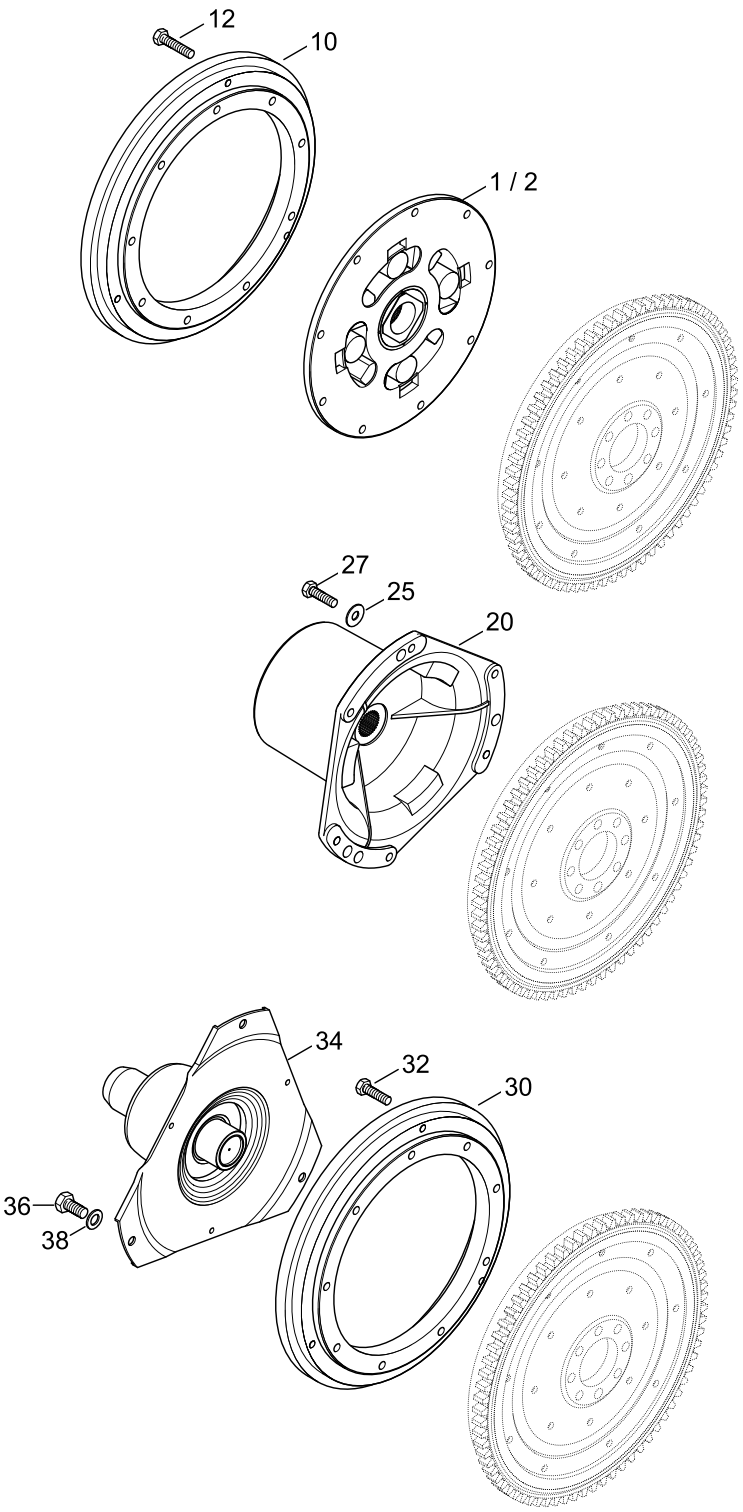

COUPLER - SMALL FLYWHEEL

144 MARINE
TURBO DIESEL
+SOLAS

02004084-0

Pos.	Part.-No.	Qty	Designation	Step
1	2178860-X	1	COUPLING DUAL STAGE 20/40-26T (FOR ZF GEAR-BOX)	.2
2	2178860-Y	1	COUPLING DUAL STAGE 16/32-17T (NEWAGE)	.2
10	2178737-A	1	FLY-RING FOR SMALL FLYWHEEL	.2
12	3802447-0	9	HEX.HD.SCR. ISO 4017-M8x45-8.8-A2C	.2
20	O987134-0	1	COUPLING FLYWHEEL 17T-16/32	.2
25	3936103-0	6	WASHER LARGE SERIES ISO 7093-1-8-200HV-A3C	.2
27	3802430-0	6	HEX.HD.SCR. ISO 4017-M8x30-10.9-A2C	.2
30	2178737-3	1	ADAPTER FLY-WHEEL MERCURY STERN-DRIVE	.2
32	3802430-0	1	HEX.HD.SCR. ISO 4017-M8x30-10.9-A2C	.2
34	2178860-N	1	COUPLING 144-, 236 BM 88.2	.2
36	3802543-0	3	HEX.HD.SCR. ISO 4017-M10x20-10.9-A3C	.2
38	3930271-0	3	WASHER DIN 125 10-140HV-A3C	.2

144 MARINE
TURBO DIESEL
+SOLAS

COUPLER

02014084-1

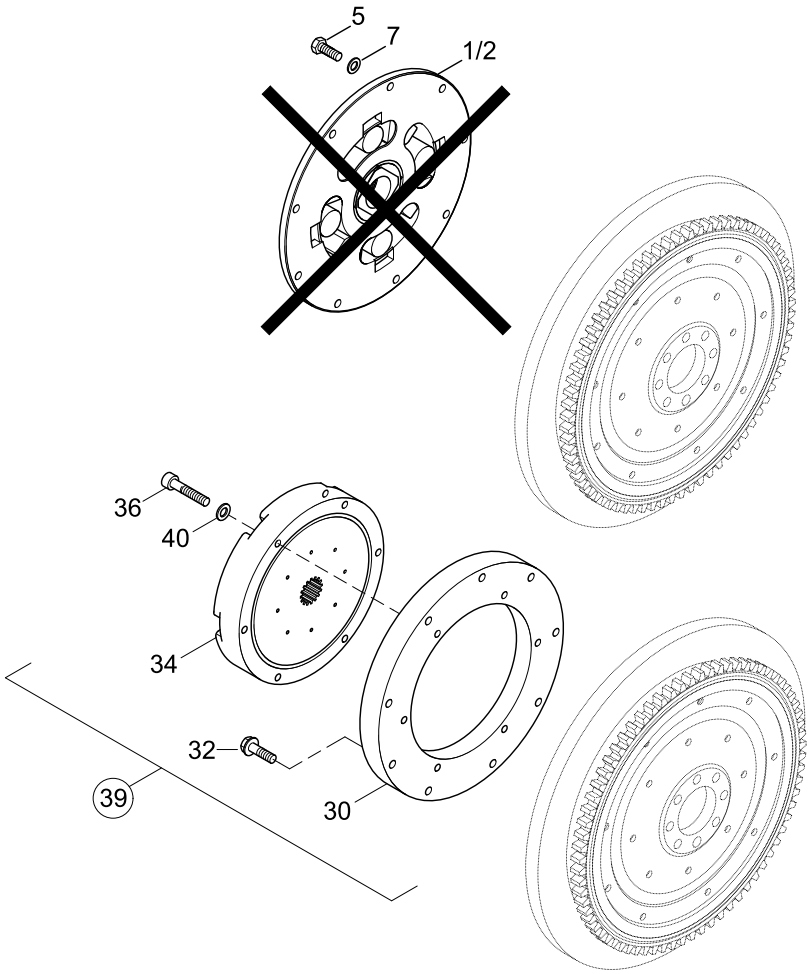

COUPLER

144 MARINE
TURBO DIESEL
+SOLAS

02014084-1

Pos.	Part.-No.	Qty	Designation	Step
1	2178860-X	1	COUPLING 20/40-26T (ZF) —> NEW NUMBER Z002066-V	.2
2	2178860-Y	1	COUPLING 16/32-17T (NEWAGE) —> NEW NUMBER Z002066-J	.2
5	3802424-0	9	HEX.HD.SCR. ISO 4017-M8x25-8.8-A2C	.2
7	3930103-0	9	WASHER DIN 125-8.4-140HV-A2	.2
30	2179163-0	1	ADAPTER RING, FLY WHEEL	.2
32	9000431-0	9	HEX.FLANGE BOLT EN 1665-M8x30-10.9-DAC	.2
34	2179164-0	1	COUPLER 20-40 26T	.2
36	9000520-0	6	HEX.SOCK. HD.CAP SCR. ISO 4762-M8x50-10.9-DAC	.2
39	Z002066-V	1	COUPLING KIT 20/40-26T F.GEAR & SCREWS	.2
40	3930103-0	6	WASHER DIN 125-8.4-140HV-A2	.2

144 MARINE TURBO DIESEL +SOLAS

COUPLER

02014084-3

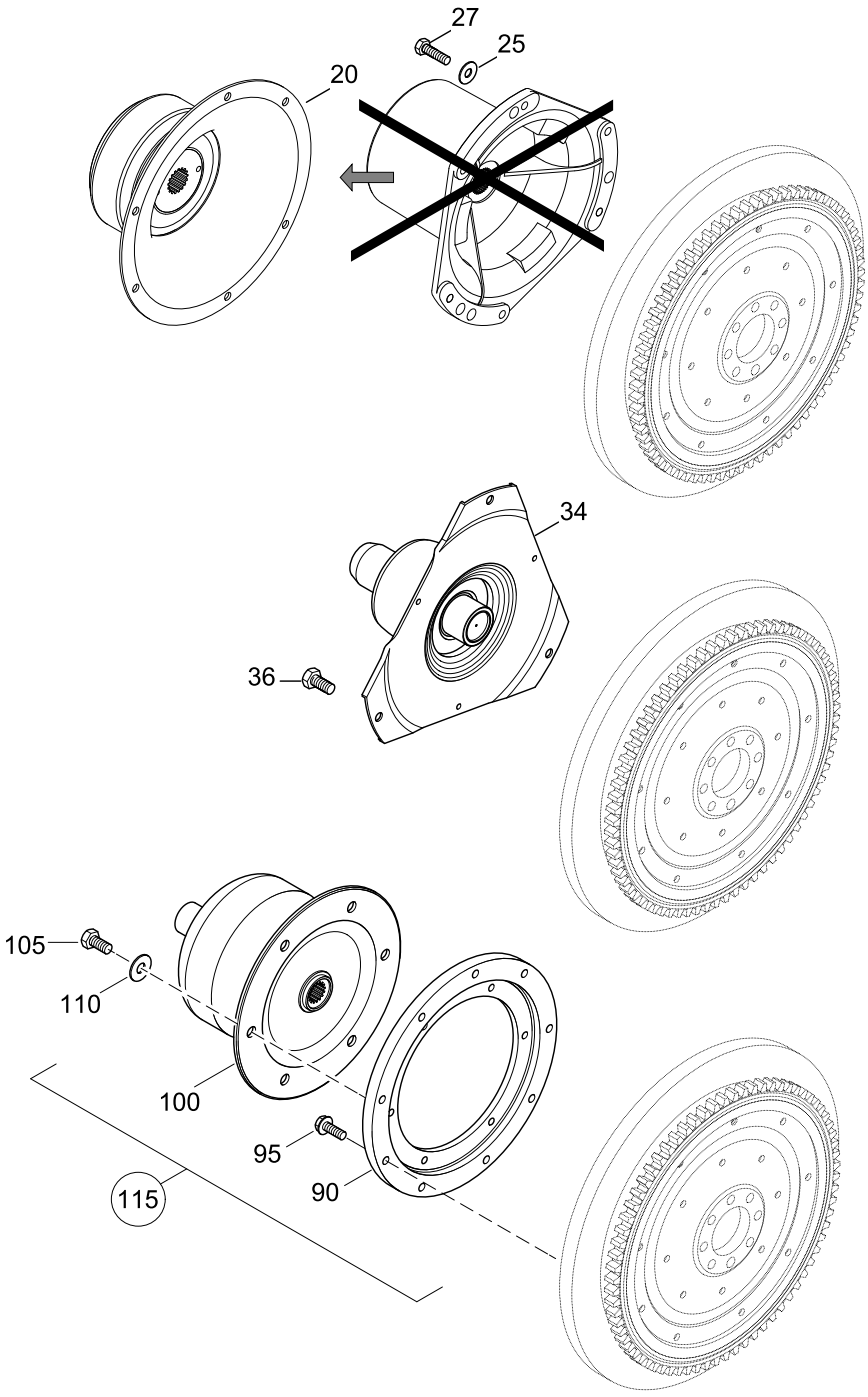

COUPLER

144 MARINE
TURBO DIESEL
+SOLAS

02014084-3

Pos.	Part.-No.	Qty	Designation	Step
20	Z021002-0	1	S.P. COUPLER	.2
25	3936103-0	6	WASHER LARGE SERIES ISO 7093-1-8-200HV-A3C	.2
27	3802430-0	6	HEX.HD.SCR. ISO 4017-M8x30-10.9-A2C	.2
34	2178860-A	1	COUPLER MERCURY-BRAVO	.2
36	O914544-0	3	HEX. BOLT WITH FLANGE 3/8-16UNCx1"-8.8	.2
90	2179078-1	1	ADAPTER FLY-WHEEL MERCURY 4 CYL.	.2
95	9000431-0	9	HEX.FLANGE BOLT EN 1665-M8x30-10.9-DAC	.2
100	2178860-M	1	COUPLER MERCURY	.2
105	3802523-0	6	HEX.HD.SCR. ISO 4017-M10x25-8.8-A3C	.2
110	3930075-0	6	WASHER DIN 125 A10.5-140HV-A2	.2
115	Z002066-5	1	COUPLING KIT MERCURY-BRAVO STERN-DRIVE	.2

144 MARINE
TURBO DIESEL
+SOLAS

FUEL PUMP, UNIT INJECTOR, PIPE

03024084-1

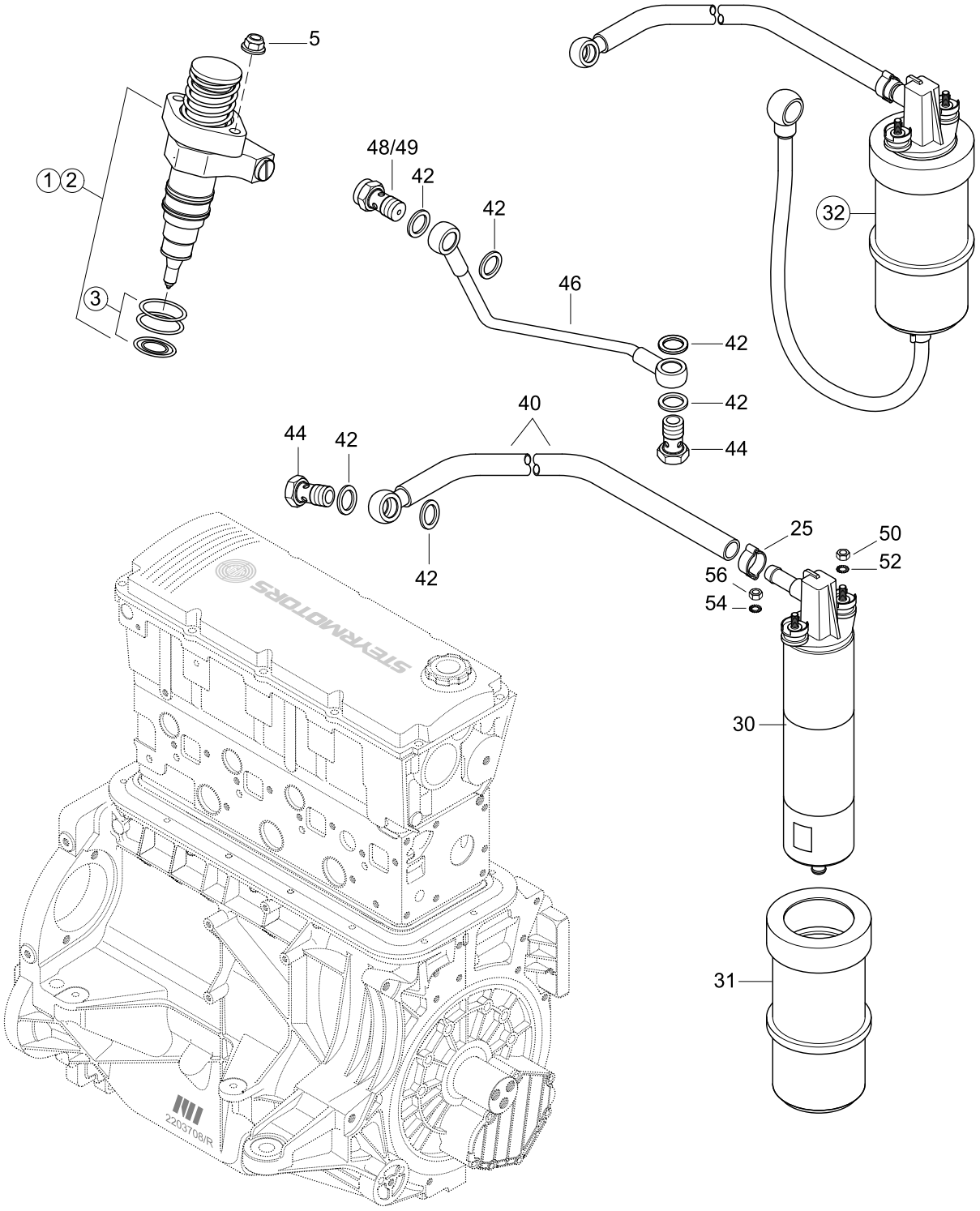

FUEL PUMP, UNIT INJECTOR, PIPE

144 MARINE
TURBO DIESEL
+SOLAS

03024084-1

Pos.	Part.-No.	Qty	Designation	Step
1	Z002030-5	4	UNIT INJECTOR ASSY 555/5 & SEAL RING —>48226999	.2
2	Z002030-7	4	UNIT INJECTOR + SEALINGS 2176557/0 48227001—>	.2
3	Z002031-0	1	SEAL KIT, UNIT INJECTOR	..3
5	9000056-1	8	HEX.FLANGE NUT DIN 6923-M8-8-A2C	.2
25	2178995-0	1	HOSE CLAMP 17,5mm	.2
30	2173396-4	1	FUEL PUMP 12V (WITH ISOLATING SLEEVE)	.2
31	2173396-I	1	ISOLATING SLEEVE FUEL PUMP	..3
32	Z002054-1	1	FUEL PUMP ASSY & LINES	.2
40	2203766-1	1	FUEL HOSE PUMP/BLOCK	.2
42	3098015-0	6	SEALING RING DIN 7603-A14x20-CU	.2
44	9000053-0	2	HOLLOW SCREW M14x1,5 DIN 7643-10-DAC A500	.2
46	2203776-0	1	FUEL PIPE BLOCK-TANDEMCOOLER (KTL)	.2
48	2178561-1	1	OVERFLOW VALVE FUEL-CYLINDER BLOCK —>48224082	.2
49	2178572-1	1	HOLLOW SCREW THROTTLED 48224083—>	.2
50	3870050-0	1	HEX.NUT DIN 934-M5-A2-70	.2
52	9000040-0	1	TOOTHED LOCK WASHER EXTERN. DIN 6797-A5.3-1.4310	.2
54	9000039-0	1	TOOTHED LOCK WASHER EXTERN. DIN 6797-A4.3-1.4310	.2
56	3870051-0	1	HEX.NUT ISO 4032-M4-A2-70	.2

03044084-0

ONLY FOR MO144V38

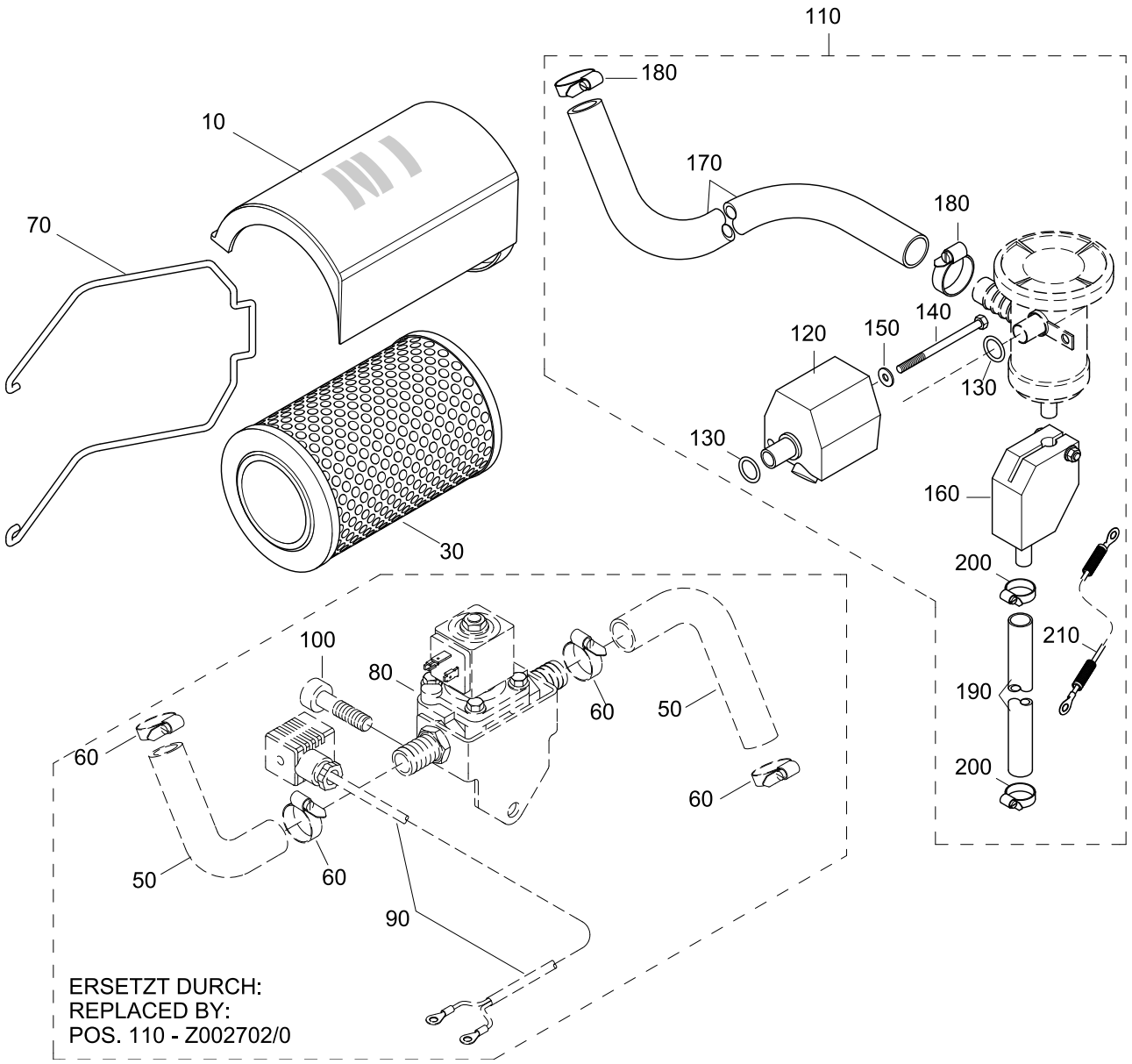

AIRFILTER -->48219069
(ONLY FOR MO144V38)

144 MARINE
TURBO DIESEL
+SOLAS

03044084-0

Pos.	Part.-No.	Qty	Designation	Step
10	2178334-0	1	COVER, AIR FILTER—>NO MORE AVAILABLE—>REPLACED BY Z024004-0	.2
30	2177468-0	1	AIR FILTER CARTRIDGE	.2
50	2178581-2	1	MOULDED HOSE OIL SEPARATOR	.2
60	2177753-0	4	HOSE CLAMP 16-25/9 EN 10088-1	.2
70	2178315-0	1	RETAINER, AIR FILTER	.2
80	2178973-G	1	SOLENOID VALVE ASSY. (SOLAS)	.2
90	2178976-0	1	CABLE SOLENOID VALVE SOLAS	.2
100	3860149-0	1	HEX.SOCK. HD.CAP SCR. DIN 912-M10x40-8.8-A3C	.2
110	Z002702-0	1	BALL VALVE KIT SOLAS	.2
120	2179069-9	1	BALL VALVE ASSY. (PAINTED)	..3
130	2178310-1	2	O-RING 17x3,53	..3
140	9000452-0	1	HEX.HD.BOLT ISO 4014-M6x75-A2-70	..3
150	9000012-0	1	WASHER LARGE SERIES DIN 9021-6.4-140HV-A2	..3
160	2179070-9	1	BALL VALVE ASSY. (PAINTED)	..3
170	2178581-2	1	MOULDED HOSE OIL SEPARATOR	..3
180	2177753-0	2	HOSE CLAMP 16-25/9 EN 10088-1	..3
190	2178287-1	1	HOSE, OIL DRAIN	..3
200	2174405-0	2	HOSE CLAMP 10-16/7,5 EN 10088-1	..3
210	2206210-1	1	GROUND WIRE ASSY.	..3

AIRFILTER 48219070 -->
(ONLY FOR MO144V38)

03044084-1

ONLY FOR MO144V38

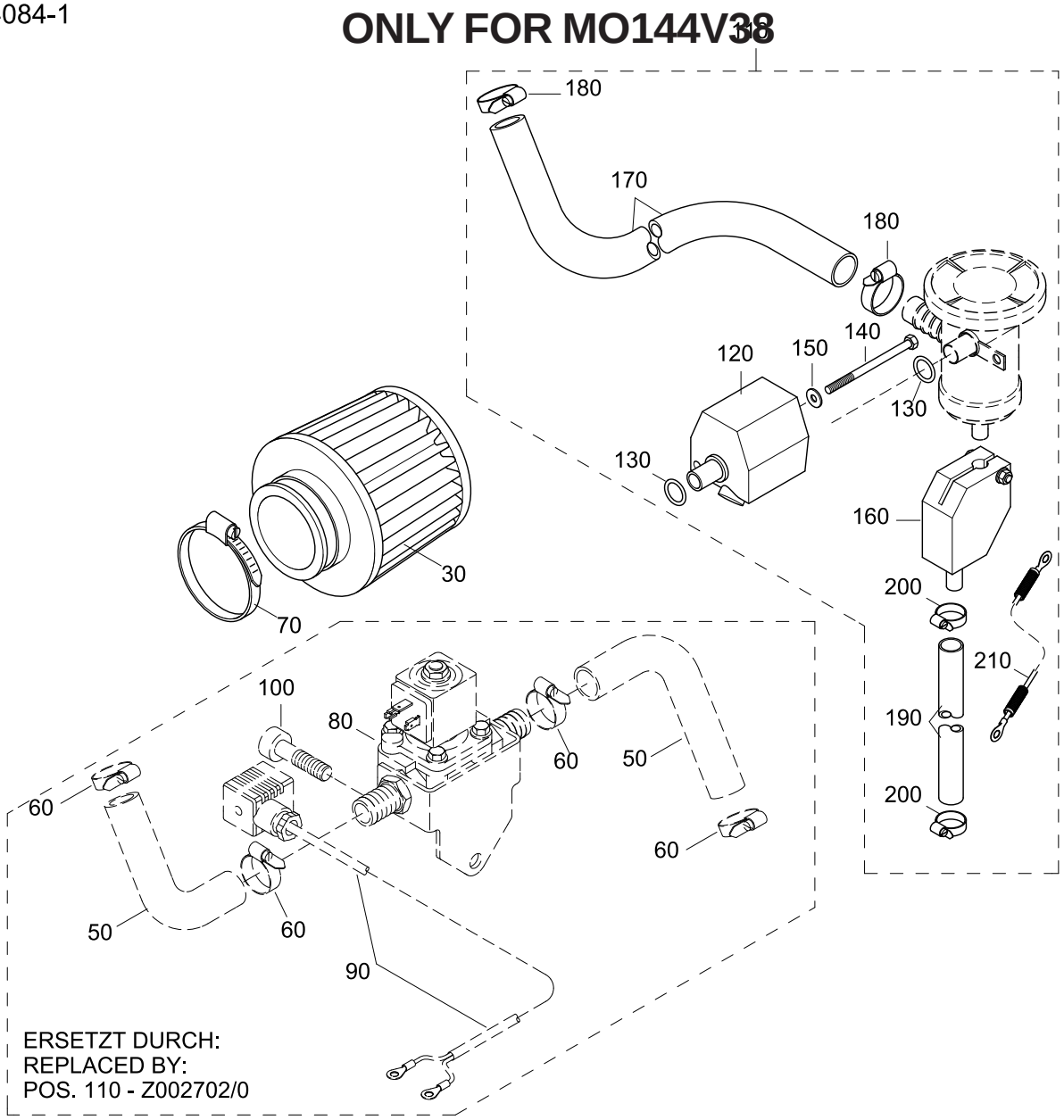

AIRFILTER 48219070 -->
(ONLY FOR MO144V38)

144 MARINE
TURBO DIESEL
+SOLAS

03044084-1

Pos.	Part.-No.	Qty	Designation	Step
30	2178992-0	1	AIR FILTER SA 70-110	.2
50	2178581-2	1	HOSE OIL SEPERATOR	.2
60	2177753-0	4	HOSE CLAMP 16-25/9	.2
70	2174417-1	1	HOSE CLAMP 70-90/9	.2
80	2178973-G	1	SOLENOID VALVE ASSY. (SOLAS)	.2
90	2178976-0	1	CABLE SOLENOID VALVE SOLAS	.2
100	3860149-0	1	HEX.SOCK. HD.CAP SCR. DIN 912-M10x40-8.8-A3C	.2
110	Z002702-0	1	BALL VALVE KIT SOLAS	.2
120	2179069-9	1	BALL VALVE ASSY. (PAINTED)	..3
130	2178310-1	2	O-RING 17 X 3,53	..3
140	9000452-0	1	HEX.HD.BOLT ISO 4014-M6x75-A2-70	..3
150	9000012-0	1	WASHER LARGE SERIES DIN 9021-6.4-140HV-A2	..3
160	2179070-9	1	BALL VALVE ASSY. (PAINTED)	..3
170	2178581-2	1	HOSE OIL SEPERATOR	..3
180	2177753-0	2	HOSE CLAMP 16-25/9	..3
190	2178287-1	1	HOSE, OIL DRAIN	..3
200	2174405-0	2	HOSE CLAMP 10-16/7,5	..3
210	2206210-1	1	GROUND WIRE ASSY.	..3

144 MARINE
TURBO DIESEL
+SOLAS

AIRFILTER --> 48228079
(ONLY FOR MO144M38)

03044094-0

ONLY FOR MO144M38

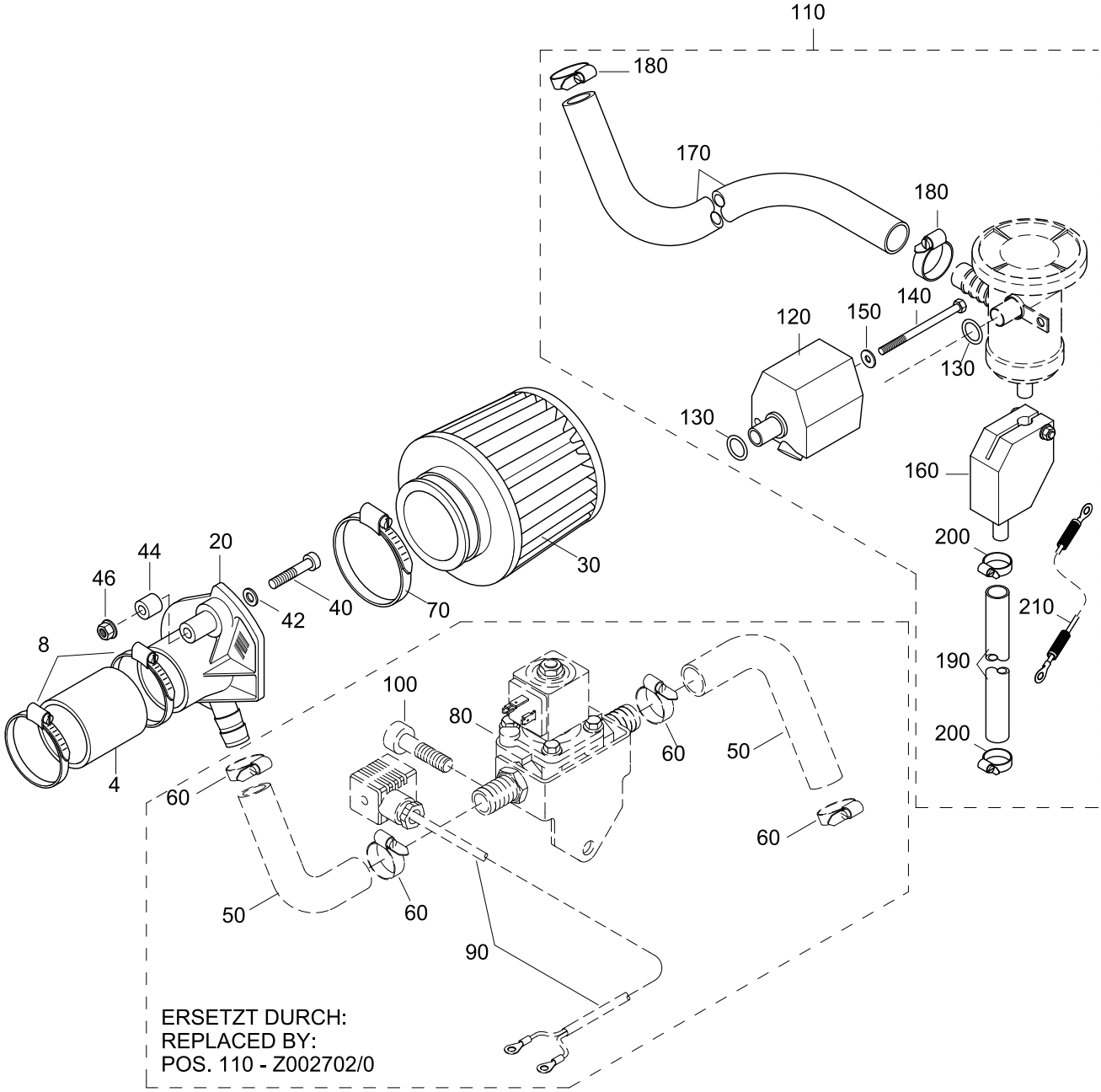

AIRFILTER --> 48228079
(ONLY FOR MO144M38)

144 MARINE
TURBO DIESEL
+SOLAS

03044094-0

Pos.	Part.-No.	Qty	Designation	Step
4	2178618-5	1	HOSE, TURBO CHARGER ID60/L=50	.2
8	2177462-0	2	HOSE CLAMP 50-70/12	.2
20	2178308-9	1	BRACKET AIR FILTER ASSY. PAINTED	.2
30	2178992-0	1	AIR FILTER SA 70-110	.2
40	3862471-0	1	HEX.SOCK. HD.CAP SCR. DIN 912-M8x70-8.8-A2C	.2
44	2205027-0	1	SLEEVE	.2
46	9000056-1	1	HEX.FLANGE NUT DIN 6923-M8-8-A2C	.2
50	2178581-2	1	HOSE OIL SEPERATOR	.2
60	2177753-0	4	HOSE CLAMP 16-25/9	.2
70	2174417-1	1	HOSE CLAMP 70-90/9	.2
80	2178973-G	1	SOLENOID VALVE ASSY. (SOLAS)	.2
90	2178976-0	1	CABLE SOLENOID VALVE SOLAS	.2
100	3860149-0	1	HEX.SOCK. HD.CAP SCR. DIN 912-M10x40-8.8-A3C	.2
110	Z002702-0	1	BALL VALVE KIT SOLAS	.2
120	2179069-9	1	BALL VALVE ASSY. (PAINTED)	..3
130	2178310-1	2	O-RING 17 X 3,53	..3
140	9000452-0	1	HEX.HD.BOLT ISO 4014-M6x75-A2-70	..3
150	9000012-0	1	WASHER LARGE SERIES DIN 9021-6.4-140HV-A2	..3
160	2179070-9	1	BALL VALVE ASSY. (PAINTED)	..3
170	2178581-2	1	HOSE OIL SEPERATOR	..3
180	2177753-0	2	HOSE CLAMP 16-25/9	..3
190	2178287-1	1	HOSE, OIL DRAIN	..3
200	2174405-0	2	HOSE CLAMP 10-16/7,5	..3
210	2206210-1	1	GROUND WIRE ASSY.	..3

144 MARINE TURBO DIESEL +SOLAS

AIRFILTER 48228080 --> (ONLY FOR MO144M38)

03044094-1

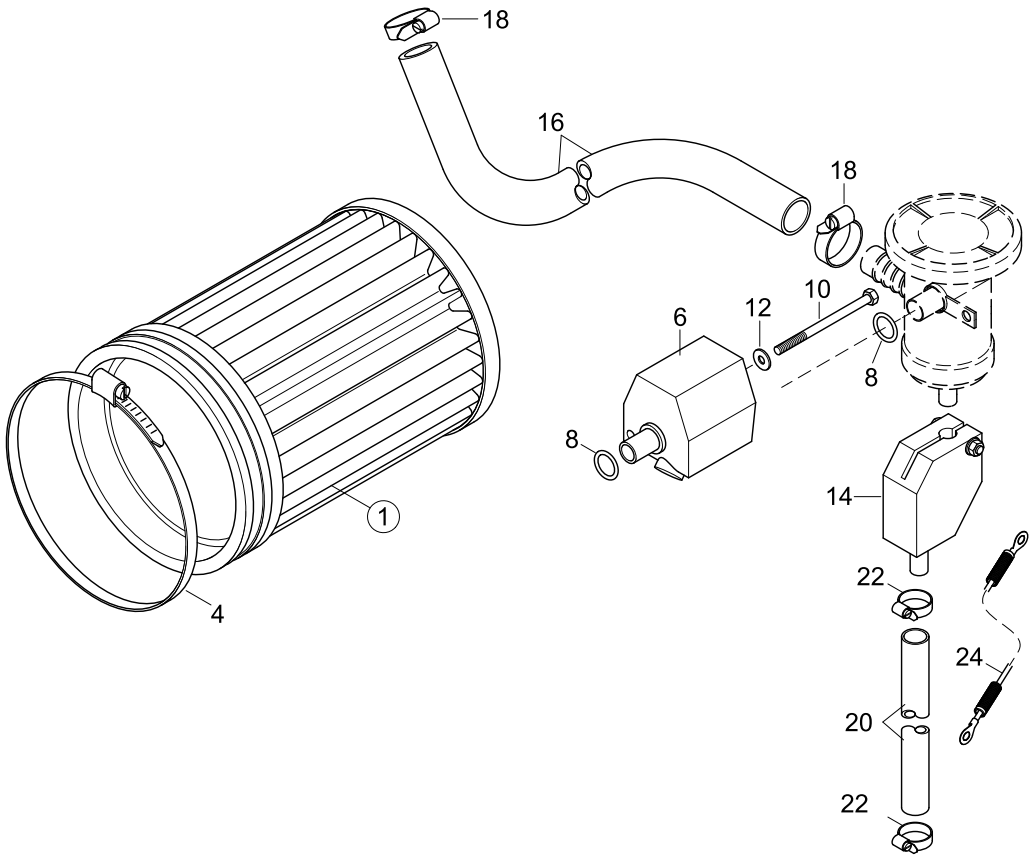

AIRFILTER 48228080 -->
(ONLY FOR MO144M38)

144 MARINE
TURBO DIESEL
+SOLAS

03044094-1

Pos.	Part.-No.	Qty	Designation	Step
1	Z002100-3	1	AIR FILTER DM101 + HOSE CLAMP	.2
4	2179195-0	1	HOSE CLAMP 110-130/9	..3
6	2179069-9	1	BALL VALVE ASSY. (PAINTED)	.2
8	2178310-1	2	O-RING 17 X 3,53	.2
10	9000452-0	1	HEX.HD.BOLT ISO 4014-M6x75-A2-70	.2
12	9000012-0	1	WASHER LARGE SERIES DIN 9021-6.4-140HV-A2	.2
14	2179070-9	1	BALL VALVE ASSY. (PAINTED)	.2
16	2178581-2	1	HOSE OIL SEPERATOR	.2
18	2177753-0	2	HOSE CLAMP 16-25/9	.2
20	2178287-1	1	HOSE, OIL DRAIN	.2
22	2174405-0	2	HOSE CLAMP 10-16/7,5	.2
24	2206210-1	1	GROUND WIRE ASSY.	.2

144 MARINE
TURBO DIESEL
+SOLAS

TURBOCHARGER (ONLY FOR MO144V38)

ONLY FOR MO144V38

03054084-0

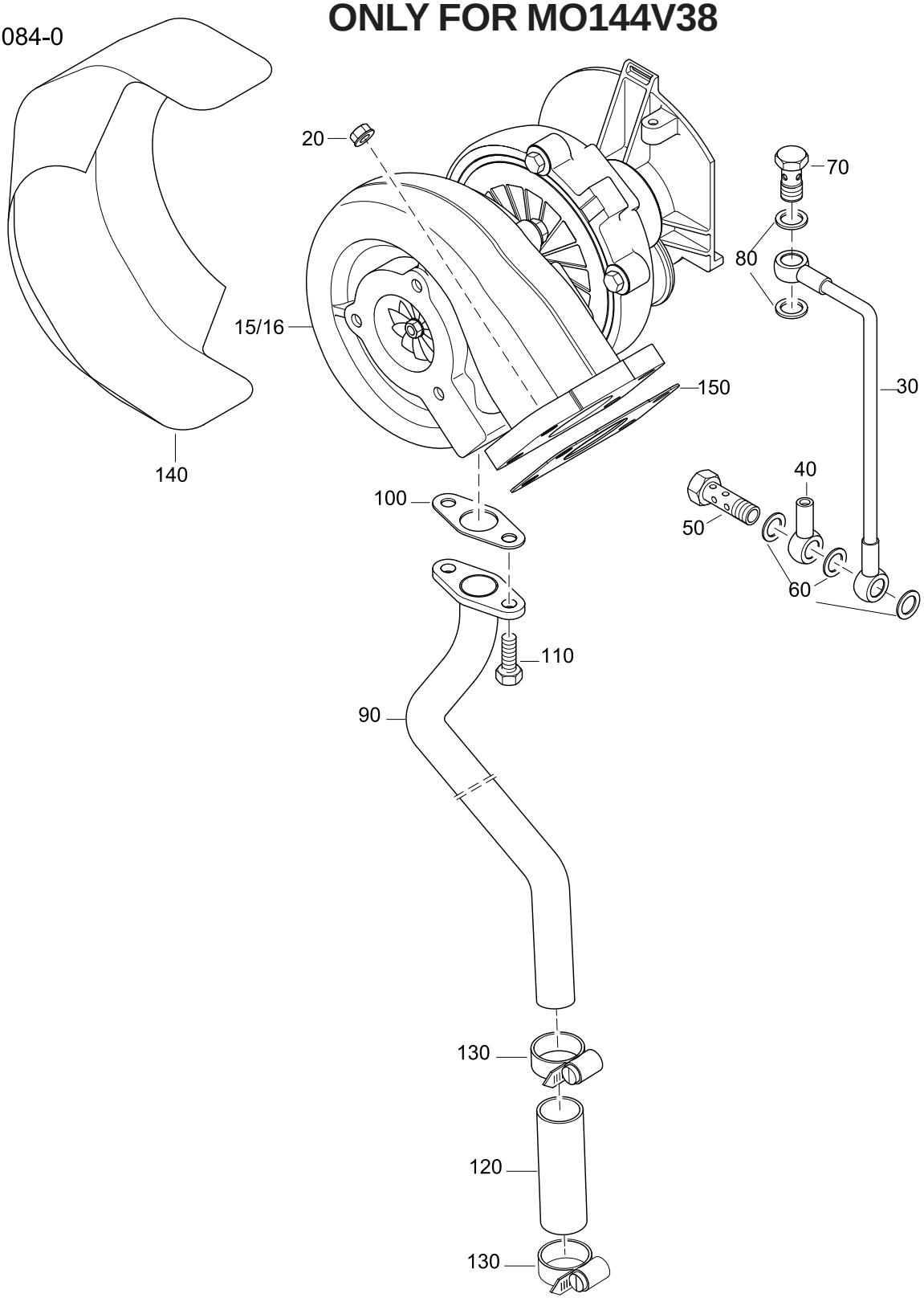

TURBOCHARGER (ONLY FOR MO144V38)

144 MARINE TURBO DIESEL +SOLAS

03054084-0

Pos.	Part.-No.	Qty	Designation	Step
15	Z002420-0	1	TURBO & BASE AIR FILTER ASSY. 144 VTI (PAINTED) —>48228136	.2
16	Z002486-0	1	TURBO & BASE AIR FILTER ASSY. 144 VTI (PAINTED) 48228137—>	.2
20	2178640-0	4	HEX.FL. NUT, PREVG.TORQUE M8	.2
30	2203770-0	1	OIL INLET PIPE TURBOCHARGER	.2
40	2203772-0	1	BRACKET OIL PRESSURE SENSOR	.2
50	2203591-0	1	DOUBLE HOLLOW SCREW M12x1,5	.2
60	3098013-0	3	DICHTRING DIN 7603-A12x18-CU	.2
70	9000010-1	1	HOLLOW SCREW M10x1	.2
80	3098011-0	2	SEALING RING DIN 7603-A10x16-CU	.2
90	2203760-0	1	PIPE OIL-RETURN ASSY.	.2
100	2203278-0	1	GASKET OIL-RETURN TURBOCHARGER	.2
110	3802321-0	2	HEX.HD.SCR. ISO 4017-M6x16-8.8-A2C	.2
120	2178573-4	1	HOSE OIL-RETURN TURBOCHARGER	.2
130	2177753-0	2	HOSE CLAMP 16-25/9	.2
140	2203749-0	1	HEAT PROTECTING TURBOCHARGER	.2
150	2200309-1	1	GASKET, TURBO	.2

TURBOCHARGER (ONLY FOR MO144M38)

03054094-0

ONLY FOR MO144M38

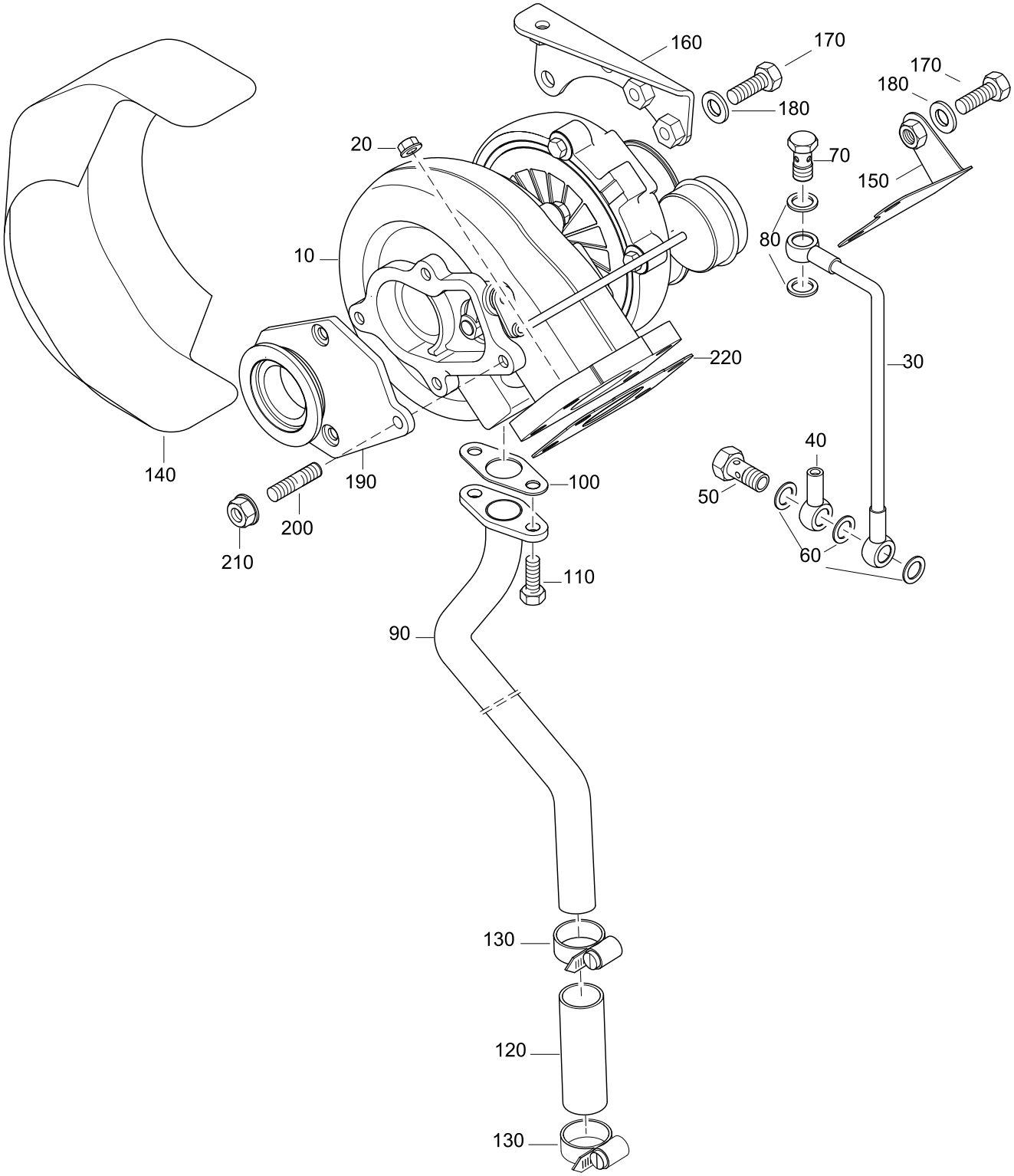

TURBOCHARGER (ONLY FOR MO144M38)

144 MARINE TURBO DIESEL +SOLAS

03054094-0

Pos.	Part.-No.	Qty	Designation	Step
10	Z002422-0	1	TURBO CHARGER ASSY. 144 (PAINTED)	.2
20	2178640-0	4	HEX.FL. NUT, PREVG.TORQUE M8	.2
30	2203770-0	1	OIL INLET PIPE TURBOCHARGER	.2
40	2203772-0	1	BRACKET OIL PRESSURE SENSOR	.2
50	2203591-0	1	DOUBLE HOLLOW SCREW M12x1,5	.2
60	3098013-0	3	DICHTRING DIN 7603-A12x18-CU	.2
70	2178569-1	1	HOLLOW SCREW M10x1,25	.2
80	3098011-0	2	SEALING RING DIN 7603-A10x16-CU	.2
90	2203760-0	1	PIPE OIL-RETURN ASSY.	.2
100	2203278-0	1	GASKET OIL-RETURN TURBOCHARGER	.2
110	3800233-0	2	HEX.HD.SCR. ISO 4017-M6x16-A2-70	.2
120	2178573-4	1	HOSE OIL-RETURN TURBOCHARGER	.2
130	2177753-0	2	HOSE CLAMP 16-25/9	.2
140	2203749-2	1	HEAT PROTECTING TURBO MARINE 4 CYL.	.2
150	2203825-0	1	BRACKET BOOST PRESSURE TIN	.2
160	2203827-2	1	BRACKET RAW WATER PIPE	.2
170	3800224-0	3	HEX.HD.SCR. ISO 4017-M8x20-A2-70	.2
180	3930103-0	3	WASHER DIN 125-8.4-140HV-A2	.2
190	Z002426-0	1	FLANGE TURBO INCL. SCREWS	.2
200	2178608-6	4	STUD DIN 939-M8x15	.2
210	2178640-0	4	HEX.FL. NUT, PREVG.TORQUE M8	.2
220	2200309-1	1	GASKET, TURBO	.2

144 MARINE
TURBO DIESEL
+SOLAS

CONTR. SOLENOID, POTENTIOMETER

03084084-1

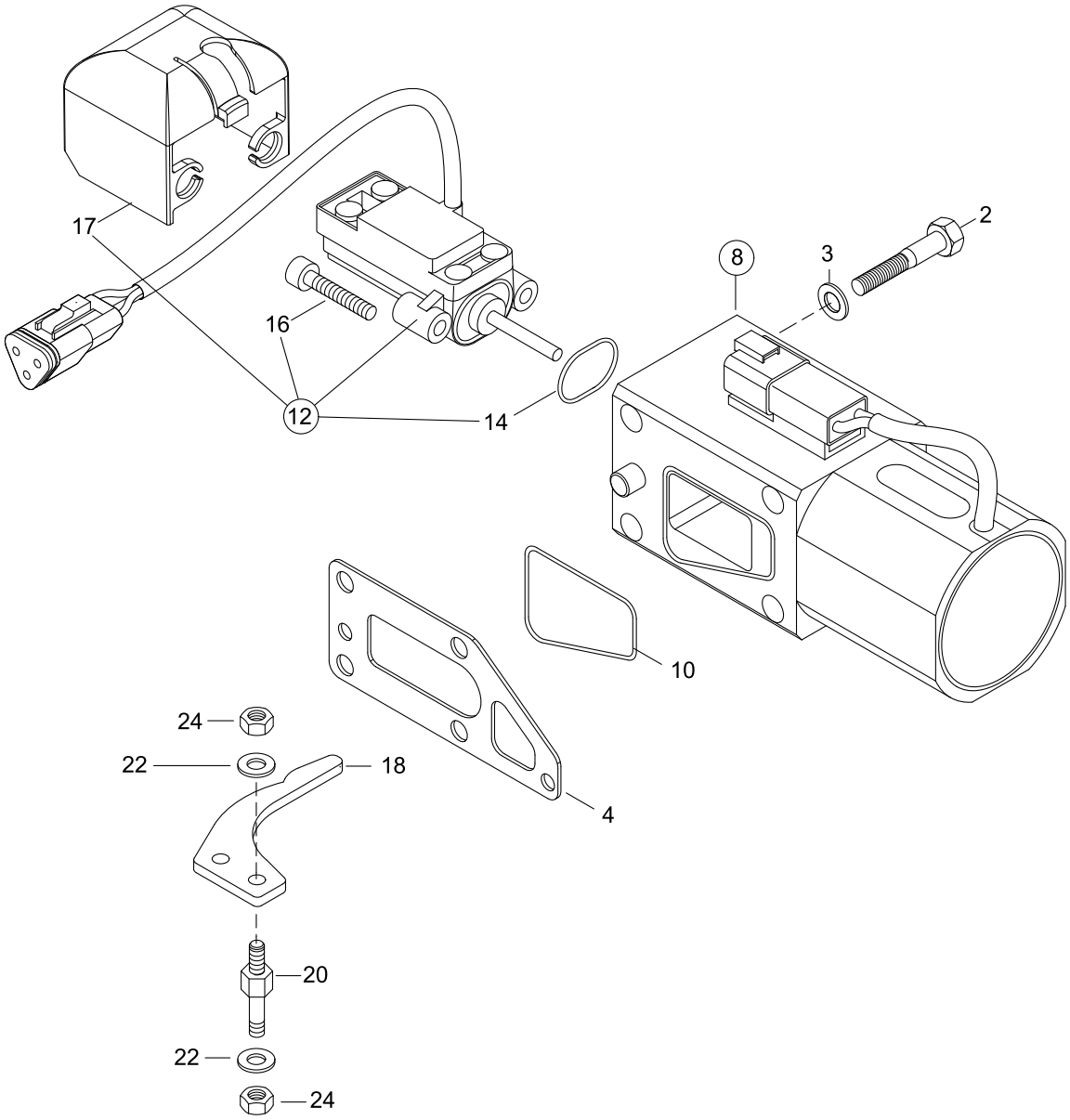

CONTR. SOLENOID, POTENTIOMETER

144 MARINE
TURBO DIESEL
+SOLAS

03084084-1

Pos.	Part.-No.	Qty	Designation	Step
2	9000446-1	4	HEX.HD.BOLT ISO 4014-M8x70-A4-70	.2
3	3930103-0	4	WASHER DIN 125-8.4-140HV-A2	.2
4	2205223-0	1	SEAL, SOLENOID (TILL 2006)	.2
8	Z002153-0	1	CONTROL SOLENOID W. SENSOR CONTROL RACK POSITION	.2
10	2179707-0	1	O-RING 43x3,5	..3
12	Z002160-0	1	SENSOR, CONTROL RACK POSITION	..3
14	2179708-0	1	O-RING 18x1,5	..3
16	9000116-1	2	HEX.SOCK. HD.CAP SCR. DIN 912-M5x20-A2-70	..3
17	2179766-0	1	PROTECTING CAP, RACK-SENSOR	..3
18	2176745-2	1	CONTROL-LEVER	.2
20	2176746-1	2	DISTANCE-SHAFT	.2
22	3931062-0	4	SPRING LOCK WASHER DIN 127-B5-FST-A3C	.2
24	3871222-0	4	HEX.NUT ISO 4032-M5-8-A2C	.2

STEYRMOTORS
INNOVATION WITH LIGHTNESS

144 MARINE
TURBO DIESEL
+SOLAS

FUEL FILTER

03094084-1

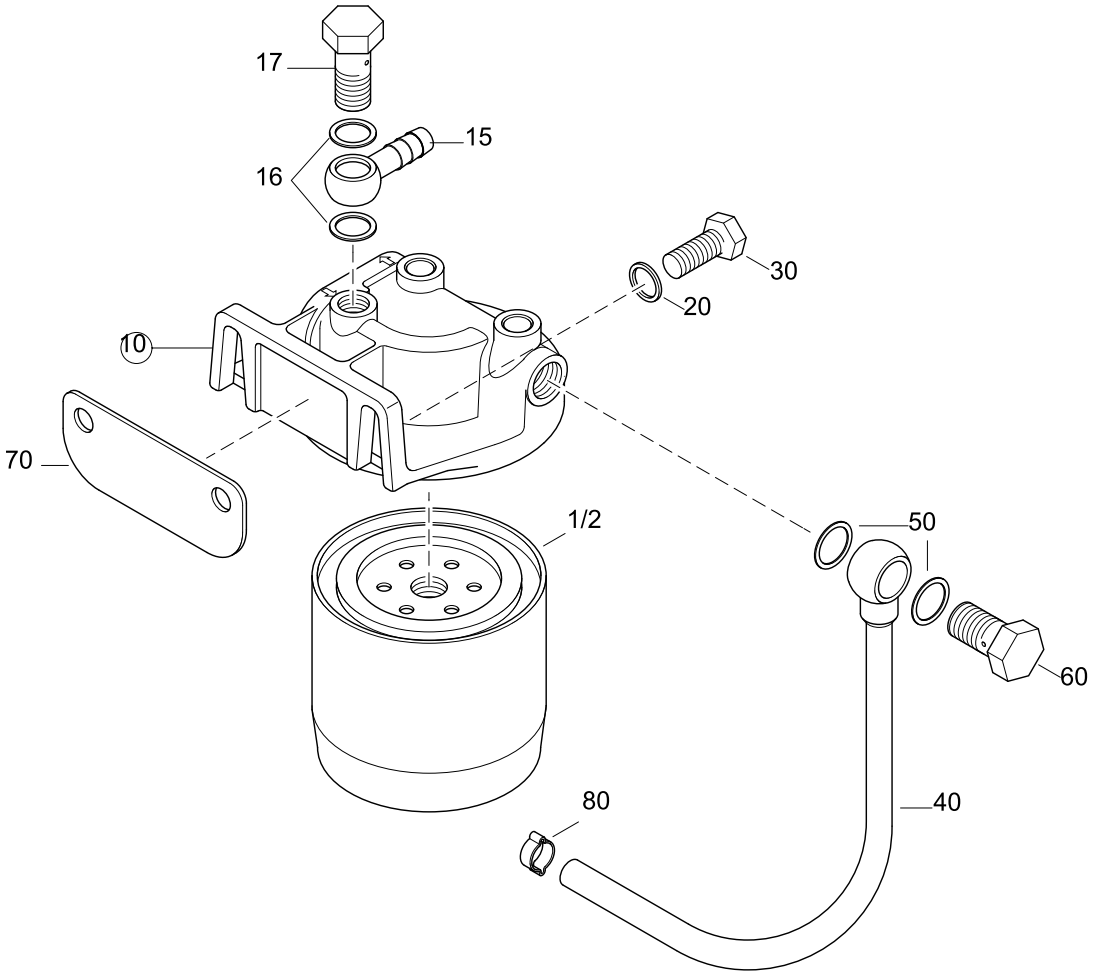

FUEL FILTER

144 MARINE
TURBO DIESEL
+SOLAS

03094084-1

Pos.	Part.-No.	Qty	Designation	Step
1	2203710-0	1	FUEL FILTER CARTIDGE SHORT	.2
2	2177745-1	1	FUEL FILTER CARTRIDGE	.2
10	Z002624-0	1	BRACKET FUEL-FILTER & BANJO FITTING (PAINTED)	.2
15	2174383-1	1	BANJO FITTING DN8 DIN 7642-A2C	..3
16	3098015-0	2	SEALING RING DIN 7603-A14x20-CU	..3
17	9000053-0	1	HOLLOW SCREW M14x1,5 DIN 7643-10-DAC A500	..3
20	3930075-0	2	WASHER DIN 125 A10.5-140HV-A2	.2
30	3802532-0	2	HEX.HD.SCR. ISO 4017-M10x35-8.8	.2
40	2203765-2	1	FUEL LINE FILTER-PUMP	.2
50	3098015-0	2	SEALING RING DIN 7603-A14x20-CU	.2
60	9000053-0	1	HOLLOW SCREW M14x1,5 DIN 7643-10-DAC A500	.2
70	2203736-2	1	RETAINING STRAP FUELPUMP	.2
80	2178995-0	1	HOSE CLAMP 17,5mm	.2

STEYRMOTORS
INNOVATION WITH LIGHTNESS

144 MARINE
TURBO DIESEL
+SOLAS

GLOW PIN

03114084-0

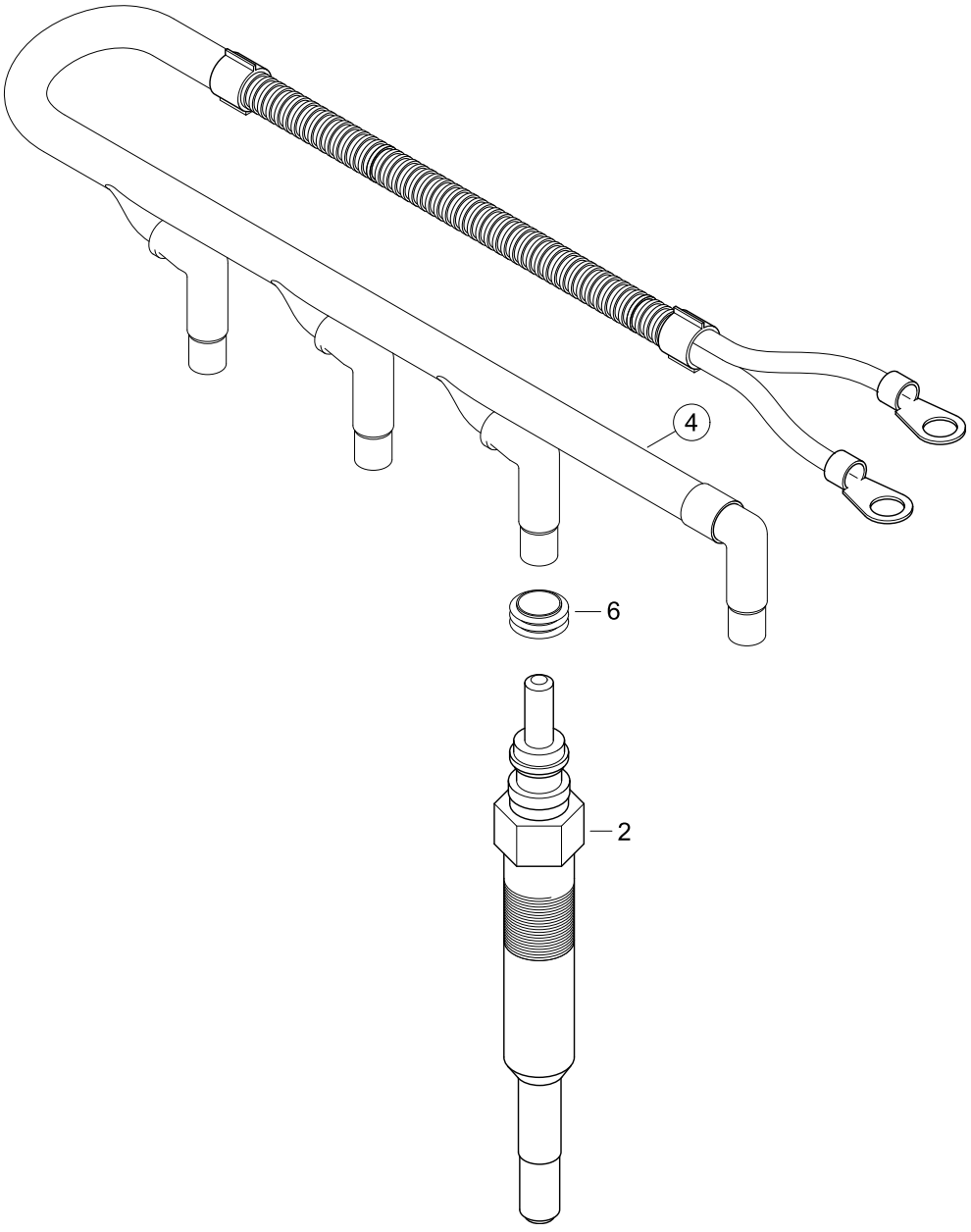

GLOW PIN

144 MARINE
TURBO DIESEL
+SOLAS

03114084-0

Pos.	Part.-No.	Qty	Designation	Step
2	2177492-5	4	GLOW PLUG	.2
4	2200215-4	1	CABLE GLOW-PLUG ASSY. 4 CYL.	.2
6	2179256-0	4	GASKET GLOW PLUG CONNECTOR	..3

POT. ACCELE., BOOST PRESSURE SENSOR

03124084-0

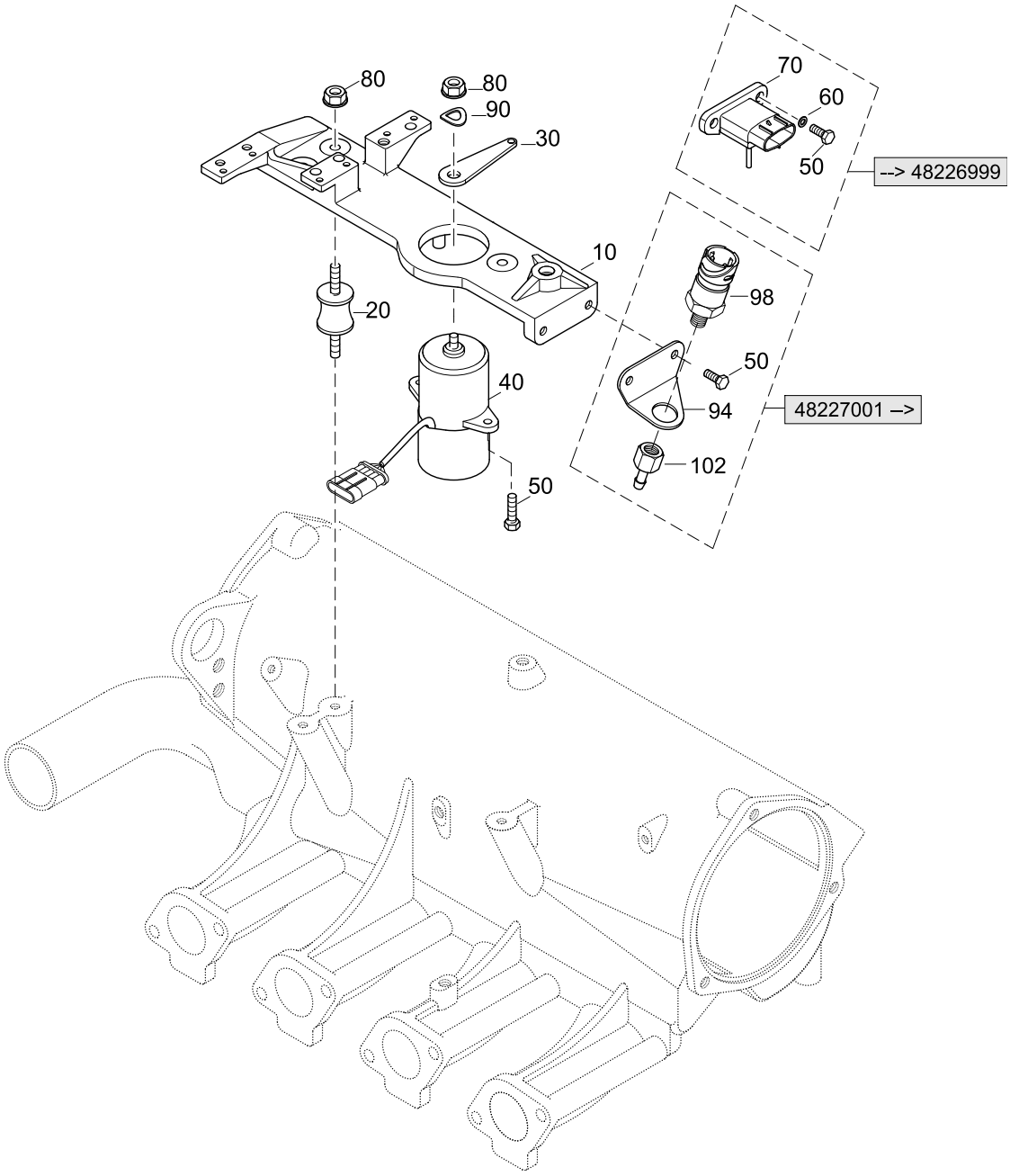

POT. ACCELE., BOOST PRESSURE SENSOR

144 MARINE
TURBO DIESEL
+SOLAS

03124084-0

Pos.	Part.-No.	Qty	Designation	Step
10	2203771-9	1	SHIFTPLATE PAINTED	.2
20	2203744-0	3	RUBBER MOUNT	.2
30	2203777-0	1	LEVER POTENTIOMETER	.2
40	2176860-1	1	POTENTIOMETER ACCELERATOR	.2
50	3800238-0	4	HEX.HD.SCR. ISO 4017-M6x12-A2-70	.2
60	3930070-0	2	WASHER DIN 125-6-140HV-A2	.2
70	2203662-1	1	BOOST-PRESSURE-SENSOR —>48226999	.2
80	3880049-0	4	HEX.FLANGE NUT DIN 6923-M6-A2-70	.2
90	3932008-0	1	SPRING WASHER DIN 137-B6-FST-A3C	.2
94	2203824-0	1	BRACKET BOOST PRESSURE SENSOR 48227001—>	.2
98	2206305-0	1	PRESSURE SENSOR 1/8-27 NPT 48227001—>	.2
102	2203834-1	1	ADAPTER BOOST PRESSURE SENSOR 48227001—>	.2

STEYRMOTORS
INNOVATION WITH LIGHTNESS

144 MARINE
TURBO DIESEL
+SOLAS

HIGH RISER, EXHAUSTPIPE (ONLY FOR MO144V38)

04014084-0

ONLY FOR MO144V38

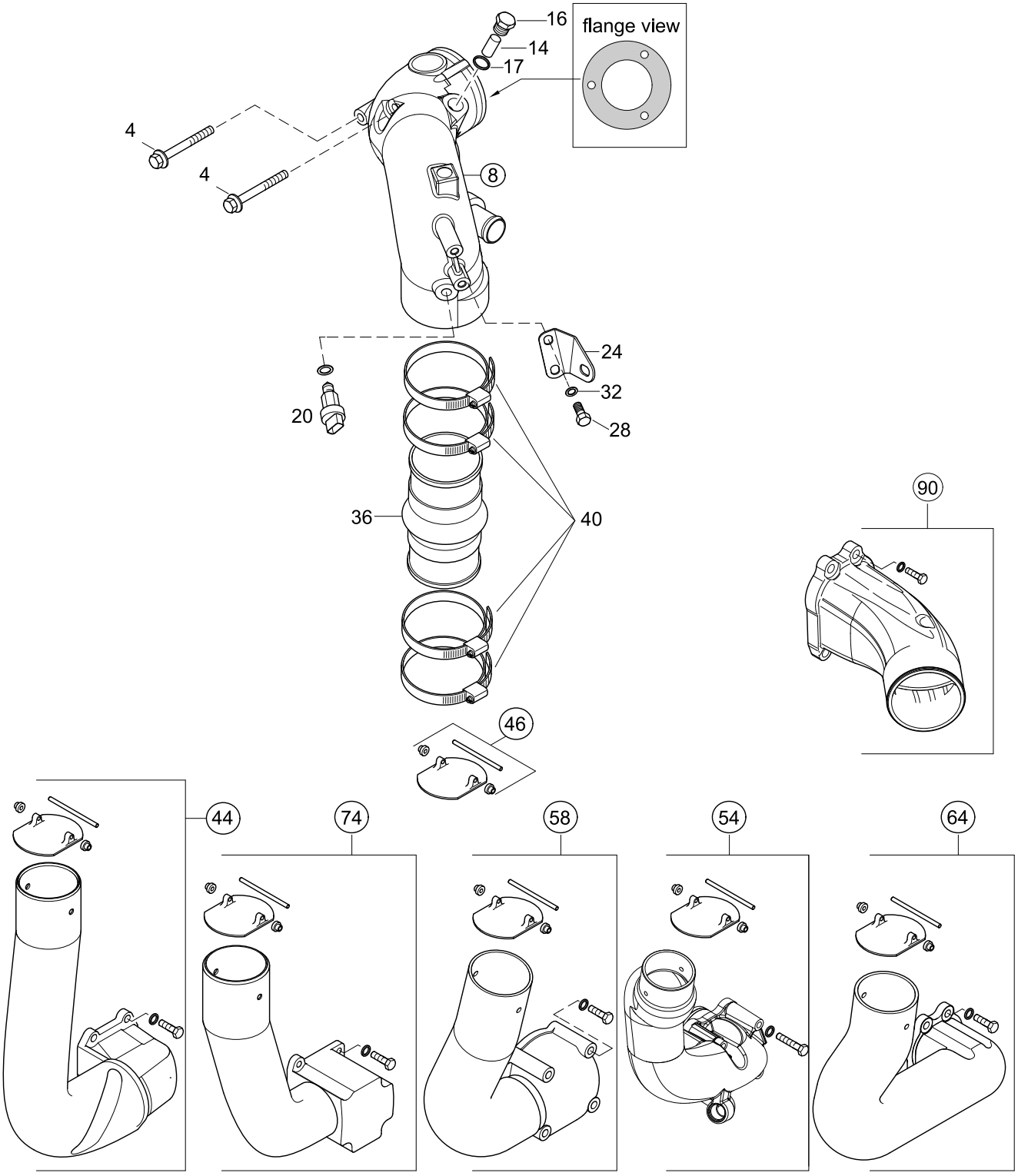

HIGH RISER, EXHAUSTPIPE (ONLY FOR MO144V38)

144 MARINE
TURBO DIESEL
+SOLAS

04014084-0

Pos.	Part.-No.	Qty	Designation	Step
4	9000329-0	3	HEX.HD.BOLT ISO 4014-M8x115-A4-70	.2
8	2203774-9	1	EXHAUST HIGH RISER ASSY. (PAINTED)	.2
14	2178413-1	1	ZINC ANODE	..3
16	2178412-1	1	PLUG M18x1.5	..3
17	3098020-0	1	SEALING RING DIN 7603-A18x22-CU	..3
20	2174623-3	1	COOLANT TEMPERATURE SENSOR	.2
21	9000786-0	1	SEALING RING DIN 7603-A12x16-CU	.2
24	2203767-8	1	SUPPORT, EXHAUST HIGH RISER (PAINTED)	.2
28	3800224-0	3	HEX.HD.SCR. ISO 4017-M8x20-A2-70	.2
32	3930103-0	3	WASHER DIN 125-8.4-140HV-A2	.2
36	Z002072-0	1	KIT, HOSE-EXHAUST PIPE	.2
40	2178943-0	4	HOSE CLAMP 90-110/12	..3
44	2178896-0	1	EXHAUST PIPE AY. (PAIN.) VOLVO SX/OMC KING COBRA	.2
46	Z002063-0	1	FLAP KIT, EXHAUST PIPE	..3
54	2178885-0	1	EXHAUST PIPE AY. (PAIN.) VOLVO DP290 R4, R6	.2
58	2178885-1	1	EXHAUST PIPE AY. (PAIN.) VOLVO DP290 V8	.2
64	2178886-1	1	EXHAUST PIPE AY. (PAIN.) MERCURY	.2
74	2178925-0	1	EXHAUST PIPE AY. (PAIN.) STERNPOWER	.2
90	Z002121-0	1	EXHAUST FLANGE MERCURY-TRANSOM (PAINTED)	.2

04014094-0

ONLY FOR MO144M38

--> 48222010

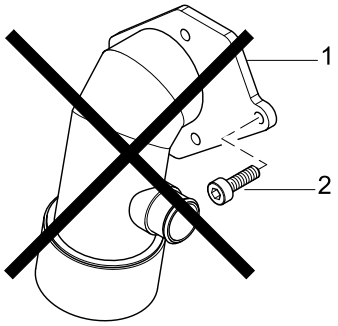

48222011 -->

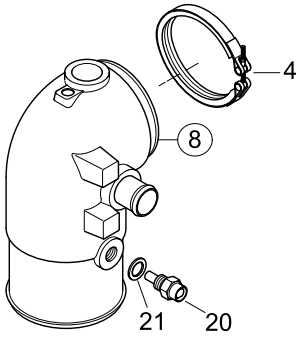

48222078 -->

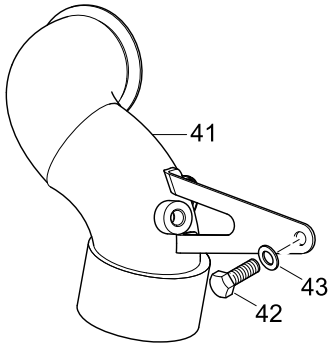

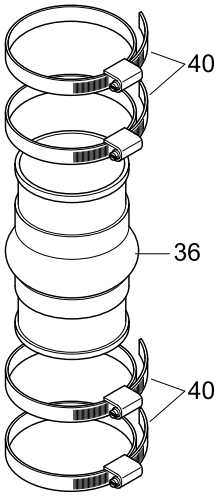

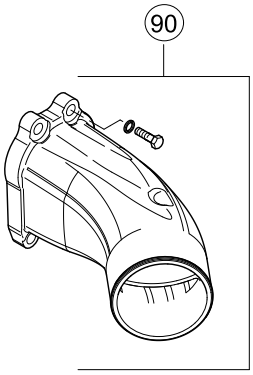

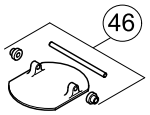

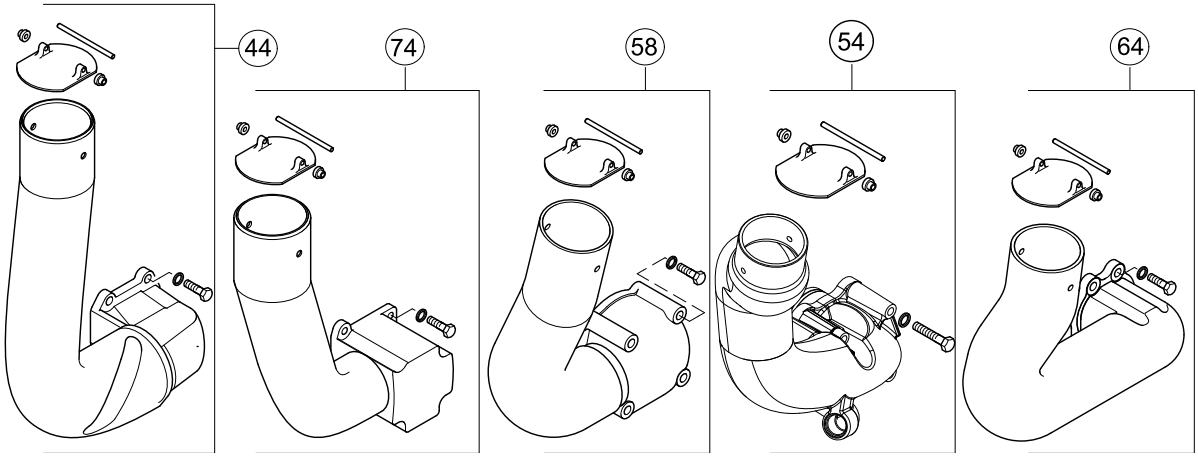

HIGH RISER, EXHAUSTPIPE (ONLY FOR MO144M38)

144 MARINE
TURBO DIESEL
+SOLAS

04014094-0

Pos.	Part.-No.	Qty	Designation	Step
1	2203831-0	1	EXHAUST HIGH RISER -> NEW NUMBER Z002487-0	.2
2	2174900-0	4	HEX.SOCK.HD.CAP.SCR.-H.R. M8x20	.2
4	2173297-0	1	CLAMP	.2
8	Z002095-0	1	ELBOW ASSY. EXHAUST (PAINTED)	.2
20	2174623-3	1	COOLANT TEMPERATURE SENSOR	.2
21	9000786-0	1	SEALING RING DIN 7603-A12x16-CU	.2
36	Z002072-0	1	KIT, HOSE-EXHAUST PIPE	.2
40	2178943-0	4	HOSE CLAMP 90-110/12	..3
41	2203836-0	1	EXHAUST HIGH RISER ASSY. MHI	.2
42	3800224-0	1	HEX.HD.SCR. ISO 4017-M8x20-A2-70	.2
43	3930103-0	1	WASHER DIN 125-8.4-140HV-A2	.2
44	2178896-0	1	EXHAUST PIPE AY. (PAIN.) VOLVO SX/OMC KING COBRA	.2
46	Z002063-0	1	FLAP KIT, EXHAUST PIPE	..3
54	2178885-0	1	EXHAUST PIPE AY. (PAIN.) VOLVO DP290 R4, R6	.2
64	2178886-1	1	EXHAUST PIPE AY. (PAIN.) MERCURY	.2
74	2178925-0	1	EXHAUST PIPE AY. (PAIN.) STERNPOWER	.2
90	Z002121-0	1	EXHAUST FLANGE MERCURY-TRANSOM (PAINTED)	.2

144 MARINE
TURBO DIESEL
+SOLAS

WATERPIPE, THERMOSTAT

05034084-0

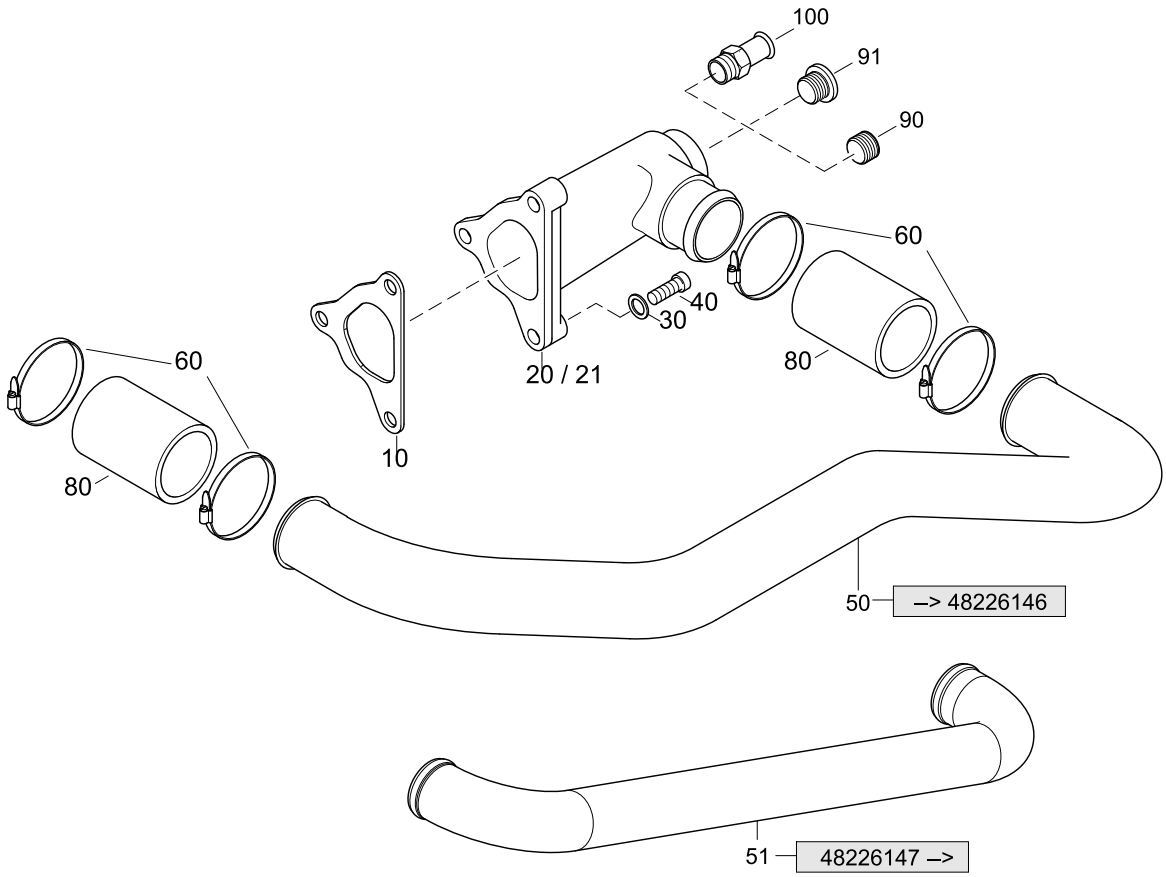

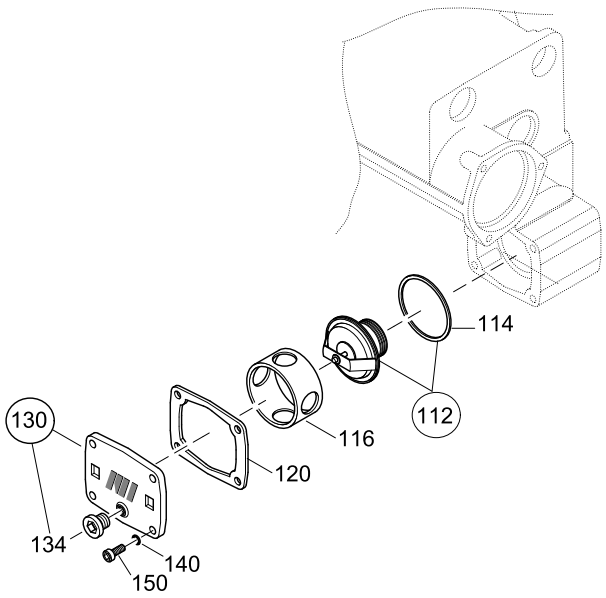

WATERPIPE, THERMOSTAT

144 MARINE
TURBO DIESEL
+SOLAS

05034084-0

Pos.	Part.-No.	Qty	Designation	Step
10	2177572-0	1	GASKET COOLANT MANIFOLD	.2
20	2177571-9	1	MANIF.COOLANT INLET, 1/2-14NPT PAINTED —>48218999	.2
21	2177571-7	1	COOLANT INLET ASSY. M22x1,5 (PAINTED) 48219001—>	.2
30	3932008-0	3	SPRING WASHER DIN 137-B6-FST-A3C	.2
40	3862327-0	3	HEX.SOCK. HD.CAP SCR. DIN 912-M6x25-8.8-A2C	.2
50	2203735-0	1	PIPE ENGINE-COOLANT —>48226146	.2
51	2203735-1	1	PIPE ENGINE-COOLANT 48226147—>	.2
60	2174406-0	4	HOSE CLAMP 25-40/9	.2
80	2177867-0	2	HOSE, ENGINE COOLANT	.2
90	O913564-0	1	SCREW PLUG 1/2-14 NPTF —>48218999	.2
91	9000590-0	1	HEX.SOCK.SCR.PLUG WITH RUBBER SEAL M22x1,5 48219001—>	.2
100	2178607-1	1	HOSE CONNECTOR HEATER —>48218999	.2
112	2173621-1	1	THERMOSTAT WITH SEALING RING 80°C	.2
114	2178414-0	1	SEALING RING THERMOSTAT	..3
116	2178946-0	1	RETAINER THERMOSTAT	.2
120	2178339-0	1	GASKET THERMOSTAT COVER	.2
130	2178204-9	1	COVER, THERMOSTAT HOUSING (PAINTED)	.2
134	9000586-0	1	HEX.SOCK.SCR.PLUG WITH RUBBER SEAL M12x1,5	..3
140	3932008-0	4	SPRING WASHER DIN 137-B6-FST-A3C	.2
150	3862320-0	4	HEX.SOCK. HD.CAP SCR. DIN 912-M6x20-8.8-A2C	.2

144 MARINE
TURBO DIESEL
+SOLAS

WATERPUMP

05044084-0

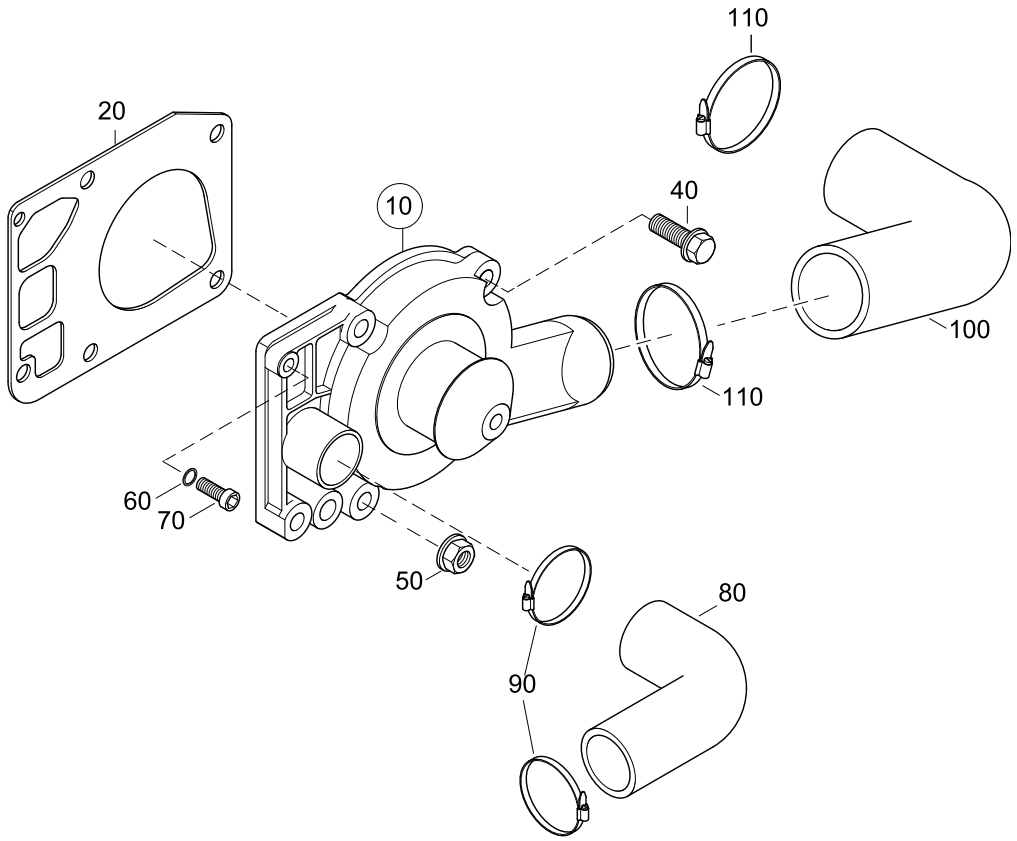

WATERPUMP

144 MARINE
TURBO DIESEL
+SOLAS

05044084-0

Pos.	Part.-No.	Qty	Designation	Step
10	Z002425-0	1	WATERPUMP ASSY. (PAINTED) INCL. GASKET	.2
20	2177329-2	1	GASKET WATERPUMP-HOUSING	..3
40	9000431-0	4	HEX.FLANGE BOLT EN 1665-M8x30-10.9-DAC	.2
50	9000056-1	1	HEX.FLANGE NUT DIN 6923-M8-8-A2C	.2
60	3932008-0	1	SPRING WASHER DIN 137-B6-FST-A3C	.2
70	3862327-0	1	HEX.SOCK. HD.CAP SCR. DIN 912-M6x25-8.8-A2C	.2
80	2178462-0	1	HOSE-ELBOW 32/90°x 88	.2
90	2174406-0	2	HOSE CLAMP 25-40/9	.2
100	2173812-0	1	HOSE-ELBOW	.2
110	2174407-0	2	HOSE CLAMP 40-60/9	.2

144 MARINE
TURBO DIESEL
+SOLAS

DRIVE BELTS, PULLEYS, TENSIONER

05054084-0

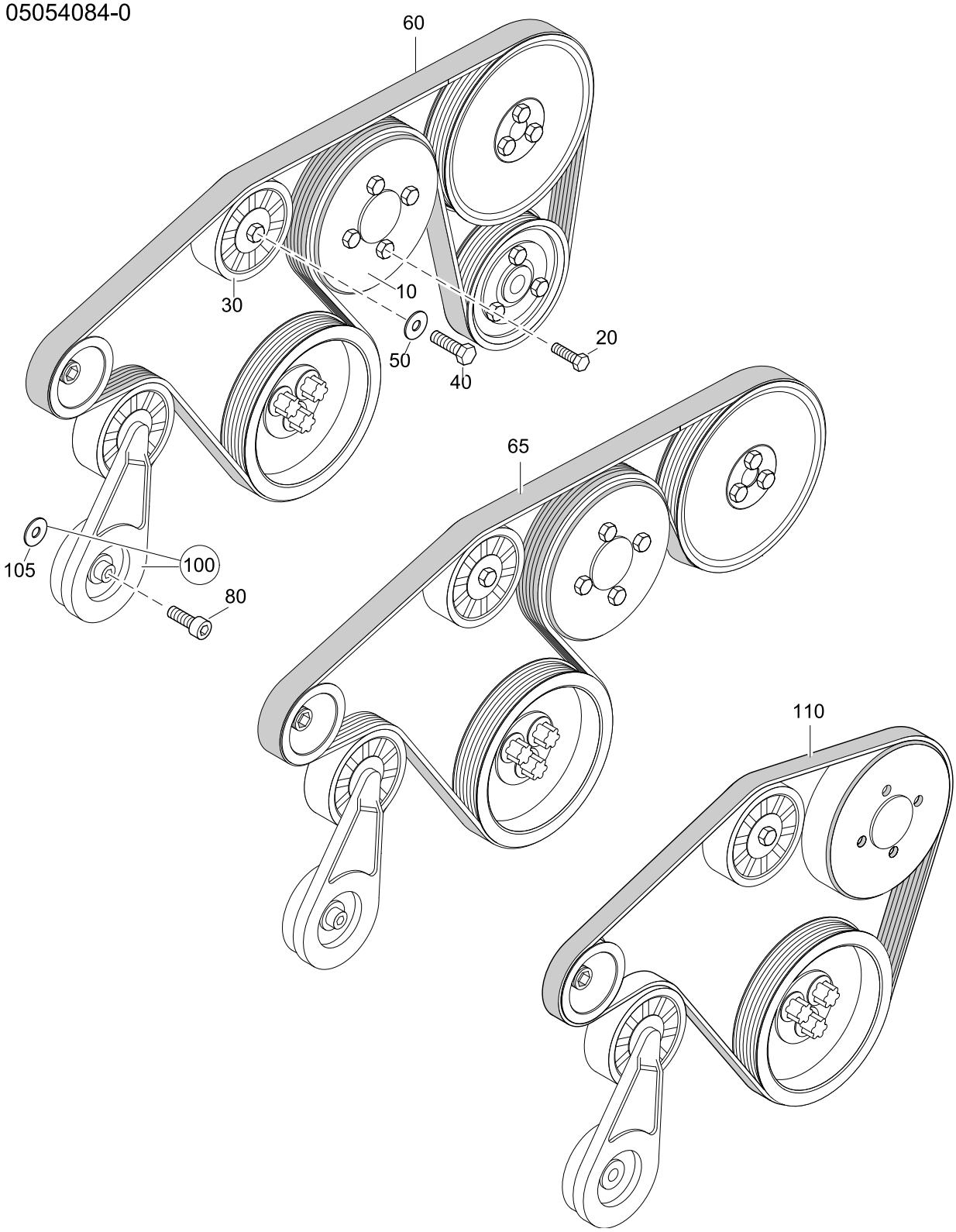

DRIVE BELTS, PULLEYS, TENSIONER

144 MARINE
TURBO DIESEL
+SOLAS

05054084-0

Pos.	Part.-No.	Qty	Designation	Step
10	2203562-1	1	PULLEY (KTL)	.2
20	9000287-0	4	HEX.FLANGE BOLT EN 1665-M6x12-8.8	.2
30	2203559-0	1	IDLER PULLEY ASSY.	.2
40	3802527-0	1	HEX.HD.SCR. ISO 4017-M10x30-A4	.2
50	3936107-0	1	WASHER LARGE SERIES DIN 9021-10.5-140HV-A4	.2
60	2203742-0	1	POLY-V BELT L=1855	.2
65	2203742-1	1	POLY-V BELT L=1675	.2
80	3862552-0	1	HEX.SOCK. HD.CAP SCR. DIN 912-M10x60-8.8-A2C	.2
100	Z002421-0	1	SPARE P. TENSIONER POLY-V BELT	.2
105	9000438-0	1	SHIM RING DIN 988-10x16x0.3	..3
110	2205539-1	1	POLY-V BELT L=1005mm	.2

RAW WATER PUMP

05104084-0

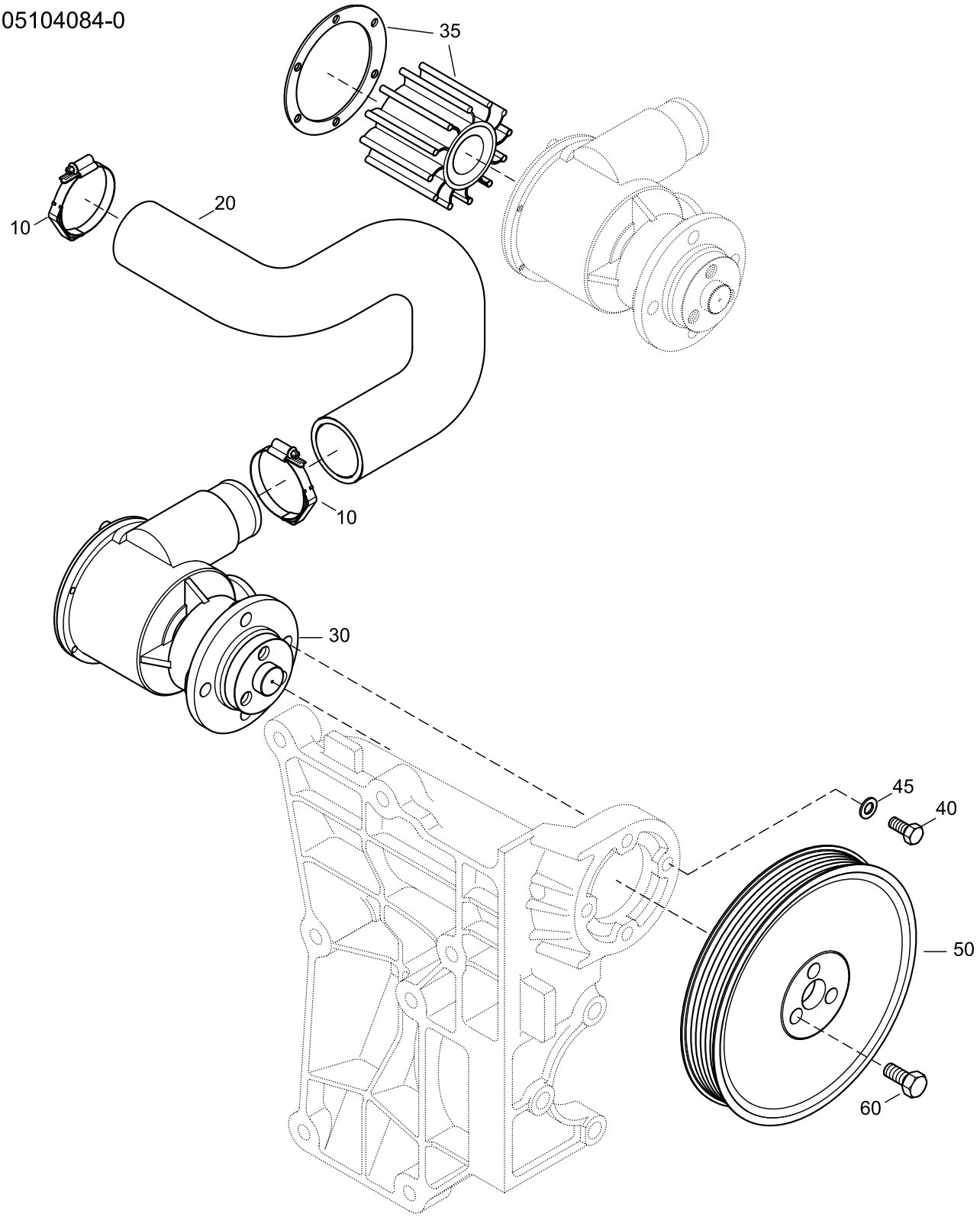

RAW WATER PUMP

144 MARINE
TURBO DIESEL
+SOLAS

05104084-0

Pos.	Part.-No.	Qty	Designation	Step
10	2179044-0	2	HOSE CLAMP WITH SPRING 25-40/9	.2
20	2203768-0	1	HOSE PUMP-TANDEM COOLER	.2
30	2203714-9	1	RAW WATER PUMP (PAINTED)	.2
35	Z011753-2	1	SERVICE KIT, RAW WATER PUMP (WITH GREASE)	.2
40	3800221-0	4	HEX.HD.SCR. ISO 4017-M6x20-A2-70	.2
45	3930070-0	4	WASHER DIN 125-6-140HV-A2	.2
50	2203746-0	1	PULLEY RAW WATER PUMP	.2
60	3860152-0	3	HEX.SOCK. HD.CAP SCR. DIN 912-M8x16-A2-70	.2

STEYRMOTORS
INNOVATION WITH LIGHTNESS

144 MARINE
TURBO DIESEL
+SOLAS

RAW WATER PIPES, FUEL-OIL COOLER

05124084-0

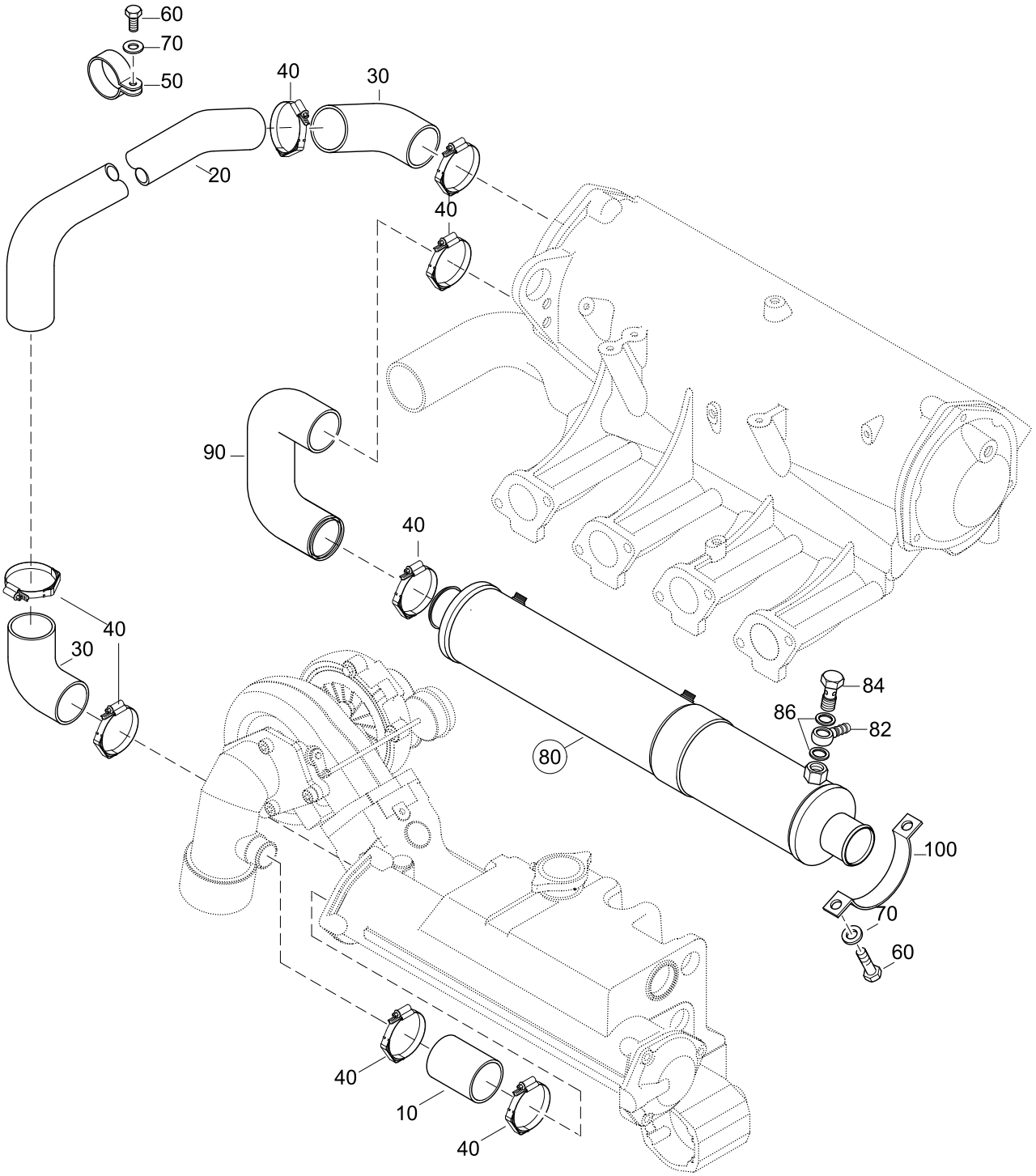

RAW WATER PIPES, FUEL-OIL COOLER

144 MARINE
TURBO DIESEL
+SOLAS

05124084-0

Pos.	Part.-No.	Qty	Designation	Step
10	2174189-0	1	COOLING WATER HOSE 32/40x50	.2
11	2177759-0	1	COOLANT HOSE 32/40x155 (ONLY MO144M38)	.2
20	2203758-0	1	PIPE ENGINE-COOLANT	.2
30	2173704-0	2	HOSE-ELBOW 32/90°x 58	.2
40	2179044-0	8	HOSE CLAMP WITH SPRING 25-40/9	.2
50	2178446-0	1	PIPE CLAMP 32/15	.2
60	3800233-0	5	HEX.HD.SCR. ISO 4017-M6x16-A2-70	.2
70	3930070-0	5	WASHER DIN 125-6-140HV-A2	.2
80	Z002097-0	1	TANDEM COOLER ASSY. (PAINTED)	.2
82	2174383-1	1	BANJO FITTING DN8 DIN 7642-A2C	..3
84	9000053-0	1	HOLLOW SCREW M14x1,5 DIN 7643-10-DAC A500	..3
86	3098015-0	2	SEALING RING DIN 7603-A14x20-CU	..3
90	2203769-0	1	MOLDED HOSE TDK-INTERCOOLER	.2
100	2203731-0	2	PIPE CLAMP 42/15	.2

144 MARINE TURBO DIESEL +SOLAS

ALTERNATOR

06014084-0

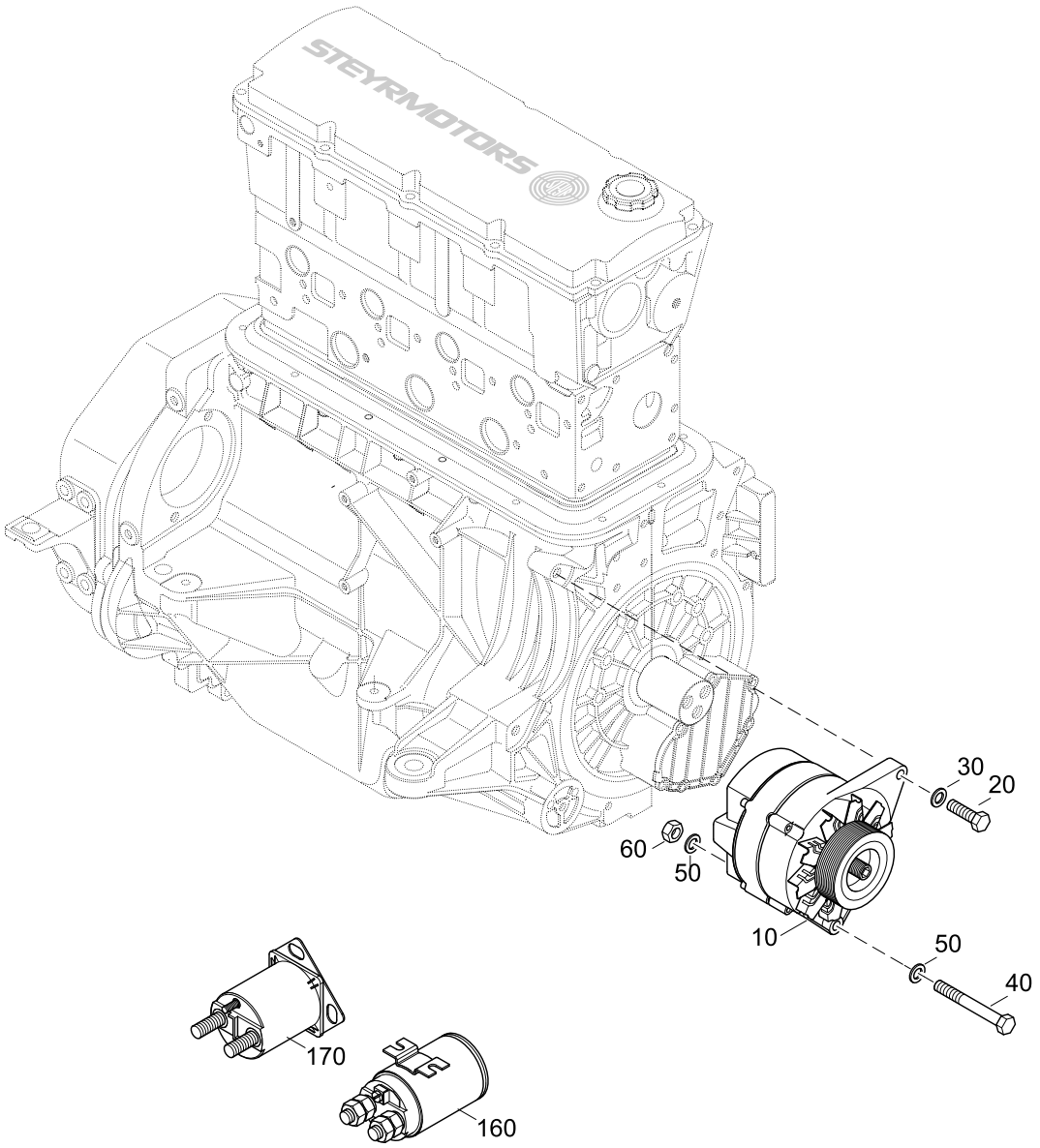

ALTERNATOR

144 MARINE
TURBO DIESEL
+SOLAS

06014084-0

Pos.	Part.-No.	Qty	Designation	Step
10	2203713-9	1	ALTERNATOR 14V/90A (PAINTED)	.2
20	3802437-0	1	HEX.HD.SCR. ISO 4017-M8x35-8.8-A2C	.2
30	3930103-0	1	WASHER DIN 125-8.4-140HV-A2	.2
40	3800575-0	1	HEX.HD.BOLT ISO 4014-M10x130-8.8-A3C	.2
50	3930075-0	2	WASHER DIN 125 A10.5-140HV-A2	.2
60	3870030-0	1	HEX.NUT ISO 4032-M10-A2-70	.2
160	9000457-0	1	RELAY 12V/150A	.2
170	2206161-0	1	POWER SOLENOID 12V	.2

06034084-0

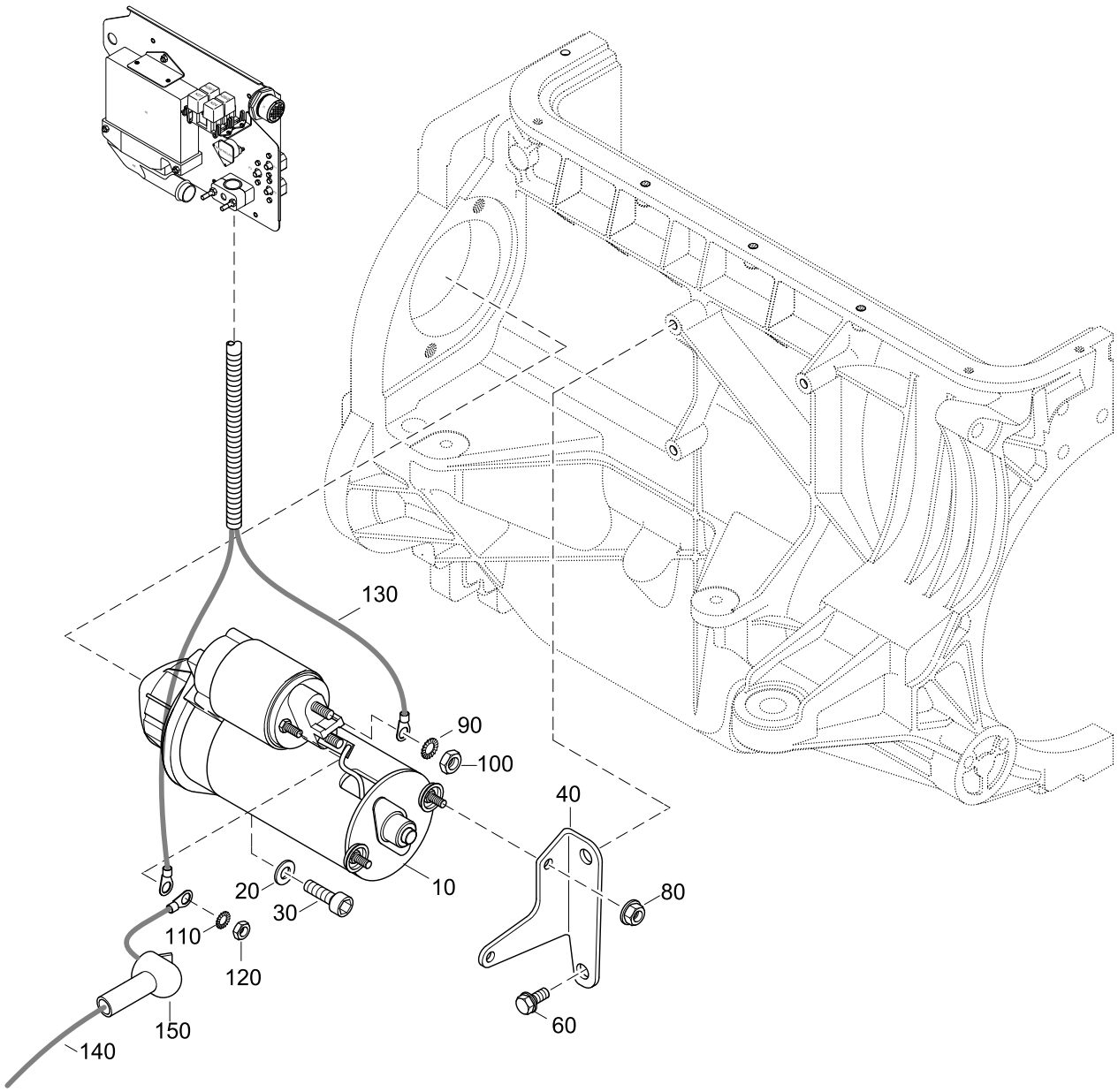

STARTING

144 MARINE
TURBO DIESEL
+SOLAS

06034084-0

Pos.	Part.-No.	Qty	Designation	Step
10	2040077-8	1	STARTER 12V (PAINTED)	.2
20	3932025-0	2	SPRING WASHER DIN 137-A10-FST-A3C	.2
30	3860149-0	2	HEX.SOCK. HD.CAP SCR. DIN 912-M10x40-8.8-A3C	.2
40	2203730-0	1	BRACKET STARTER	.2
60	9000305-0	2	HEX.FLANGE BOLT EN 1665-M8x20-10.9-DAC	.2
80	3880049-0	2	HEX.FLANGE NUT DIN 6923-M6-A2-70	.2
90	9000013-0	2	TOOTHED LOCK WASHER EXTERNAL DIN 6797-A8.4-1.4310	.2
100	3870045-0	1	HEX.NUT ISO 4032-M8-A2-70	.2
110	9000040-0	1	TOOTHED LOCK WASHER EXTERN. DIN 6797-A5.3-1.4310	.2
120	3870050-0	1	HEX.NUT DIN 934-M5-A2-70	.2
130	Z002167-0	1	HARNESS STARTER (SPARE)	.2
140	2206213-0	1	BATTERY CABLE RED	.2
150	O910111-0	1	RUBBER PROTECTION CAP	.2

144 MARINE
TURBO DIESEL
+SOLAS

ENGINE HARNESS
--> 48221066

06054084-0

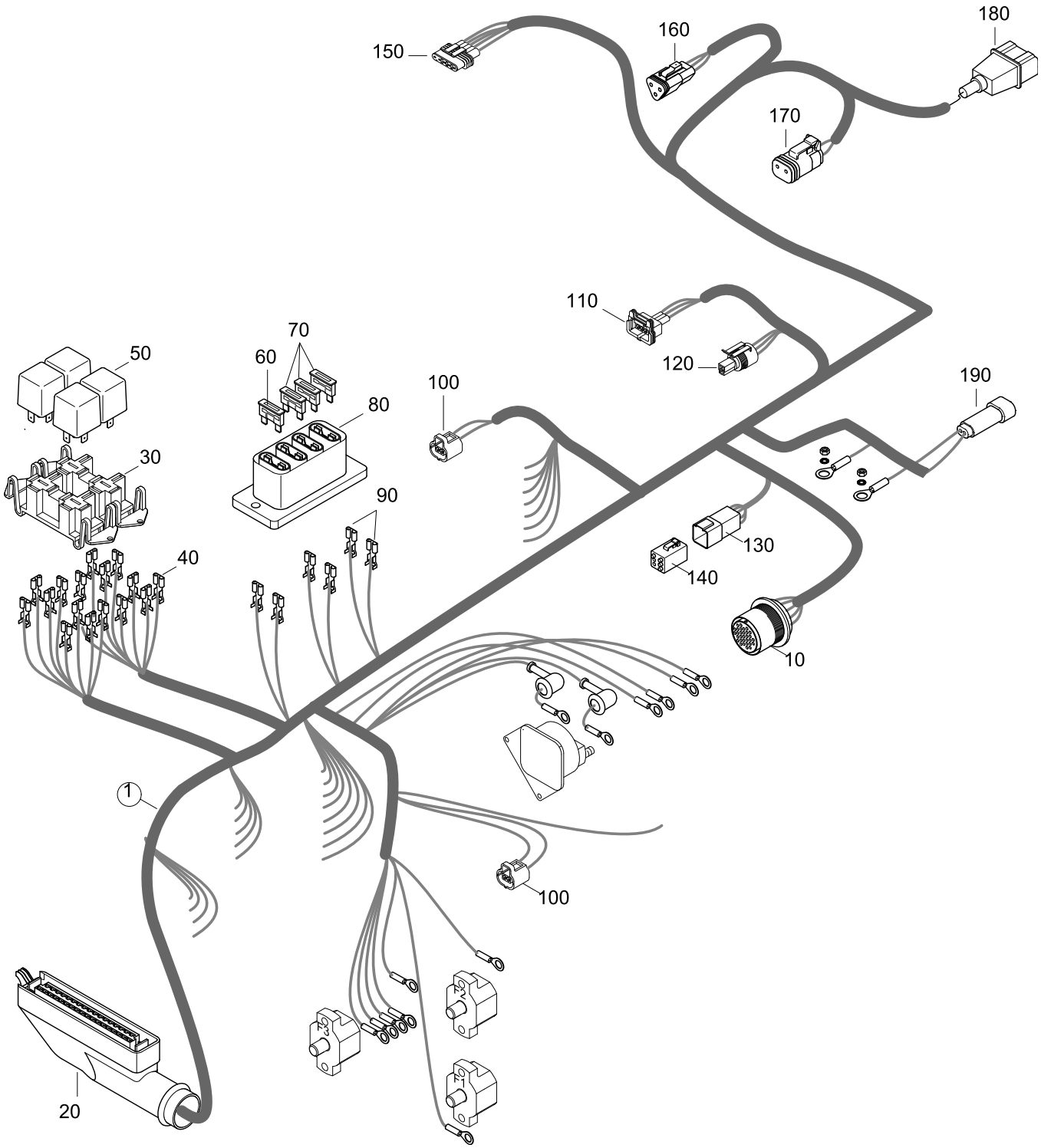

ENGINE HARNESS
--> 48221066

144 MARINE
TURBO DIESEL
+SOLAS

06054084-0

Pos.	Part.-No.	Qty	Designation	Step
1	2206207-0	1	ENGINE HARNESS	.2
10	Z002410-0	1	CABLE-PLUG PAIR COMPL. 23-POLE	..3
20	Z002411-0	1	RECEPTACLE COMPL. ECU	..3
30	O334191-0	2	RELAY BRACKET	..3
40	3499650-0	19	RECEPTACLE 6,3-2,5	..3
50	9000183-0	3	RELAY 12V 40A	..3
60	12156	1	FUSE 5A, LIGHTBRAUN	..3
70	11345	3	FUSE 10A, RED	..3
80	2206152-0	1	FUSE CARRIER 4 WAY	..3
90	9000125-0	6	BLADE TERMINAL 6,3x2,5 / 1,5-2,5	..3
100	Z002046-1	2	CONNECTOR COOLANT TEMP. SENSOR	..3
110	Z002412-0	1	PLUG COMPL. REVOLUTION SENSOR	..3
120	Z002413-0	1	CONNECTOR OIL PRESSURE SENSOR	..3
130	Z002415-0	1	PLUG COMPL. DIAGNOSTIC 6 WAY	..3
140	2178729-3	1	DIAGNOSTIC PLUG 6-WAY	..3
150	Z002414-0	1	CONNECTOR POTENTI. ACCELERATOR	..3
160	Z002416-0	1	PLUG POT. CONTROL ROD POSITION 3-POLE	..3
170	Z002417-0	1	PLUG COMPL. CONTROL SOLENOID 2-POLE	..3
180	Z002418-0	1	PLUG ASSY BOOST PRESSURE SENSO R 3-POLE	..3
190	Z002419-0	1	PLUG COMPL. GEAR SWITCH 2 WAY	..3

144 MARINE
TURBO DIESEL
+SOLAS

ENGINE HARNESS
48221067 --> 48226999

06054084-1

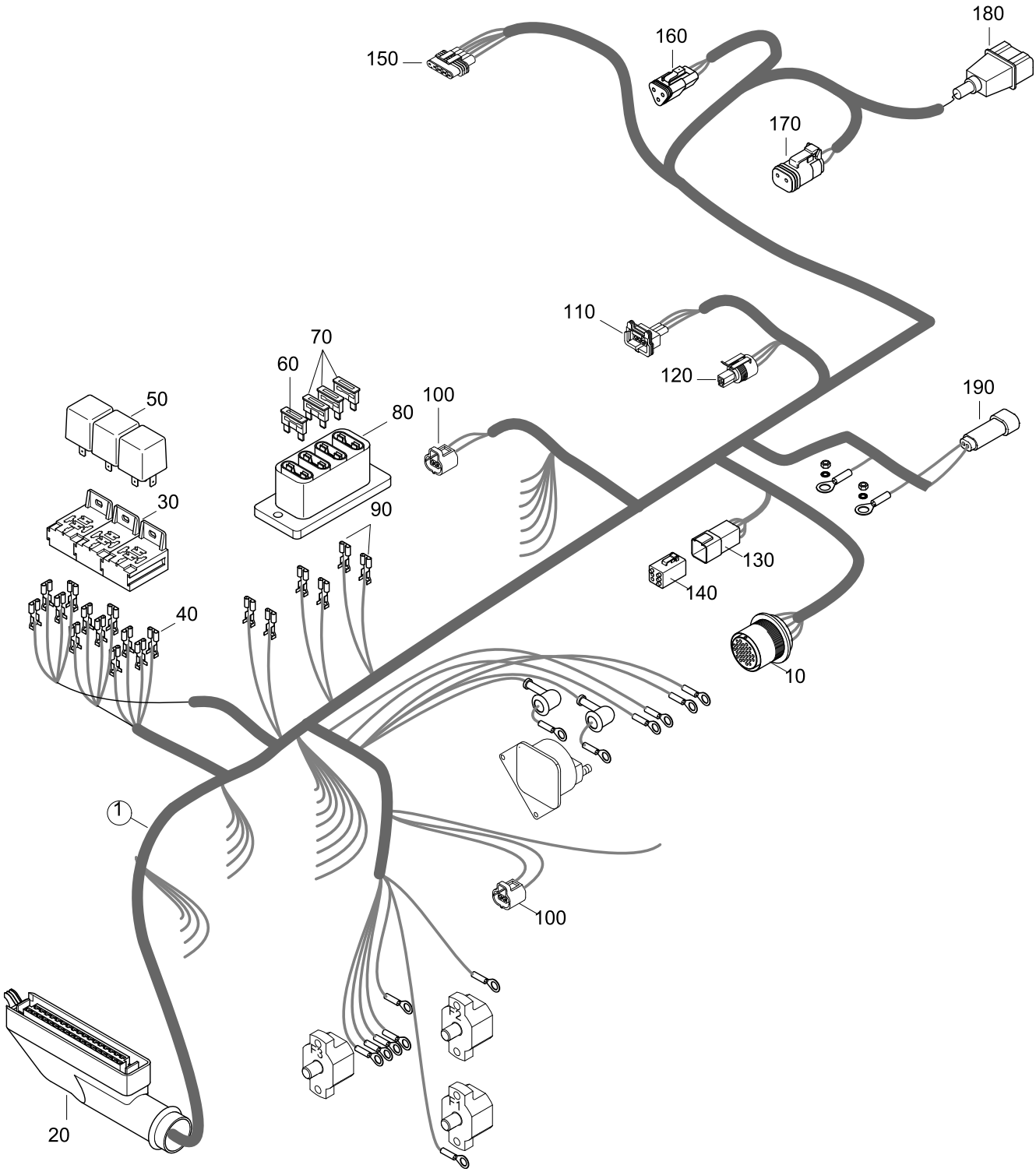

ENGINE HARNESS
48221067 --> 48226999

144 MARINE
TURBO DIESEL
+SOLAS

06054084-1

Pos.	Part.-No.	Qty	Designation	Step
1	2206207-2	1	ENGINE HARNESS	.2
10	Z002410-0	1	CABLE-PLUG PAIR COMPL. 23-POLE	..3
20	Z002411-0	1	RECEPTACLE COMPL. ECU	..3
30	9000421-0	3	RELAY SOCKET	..3
40	3499650-0	19	RECEPTACLE 6,3-2,5	..3
50	9000183-0	3	RELAY 12V 40A	..3
60	12156	1	FUSE 5A, LIGHTBRAUN	..3
70	11345	3	FUSE 10A, RED	..3
80	2206152-0	1	FUSE CARRIER 4 WAY	..3
90	9000125-0	6	BLADE TERMINAL 6,3x2,5 / 1,5-2,5	..3
100	Z002046-1	2	CONNECTOR COOLANT TEMP. SENSOR	..3
110	Z002412-0	1	PLUG COMPL. REVOLUTION SENSOR	..3
120	Z002413-0	1	CONNECTOR OIL PRESSURE SENSOR	..3
130	Z002415-0	1	PLUG COMPL. DIAGNOSTIC 6 WAY	..3
140	2178729-3	1	DIAGNOSTIC PLUG 6-WAY	..3
150	Z002414-0	1	CONNECTOR POTENTI. ACCELERATOR	..3
160	Z002416-0	1	PLUG POT. CONTROL ROD POSITION 3-POLE	..3
170	Z002417-0	1	PLUG COMPL. CONTROL SOLENOID 2-POLE	..3
180	Z002418-0	1	PLUG ASSY BOOST PRESSURE SENSO R 3-POLE	..3
190	Z002419-0	1	PLUG COMPL. GEAR SWITCH 2 WAY	..3

144 MARINE
TURBO DIESEL
+SOLAS

ENGINE HARNESS
48227001 -->

06056184-2

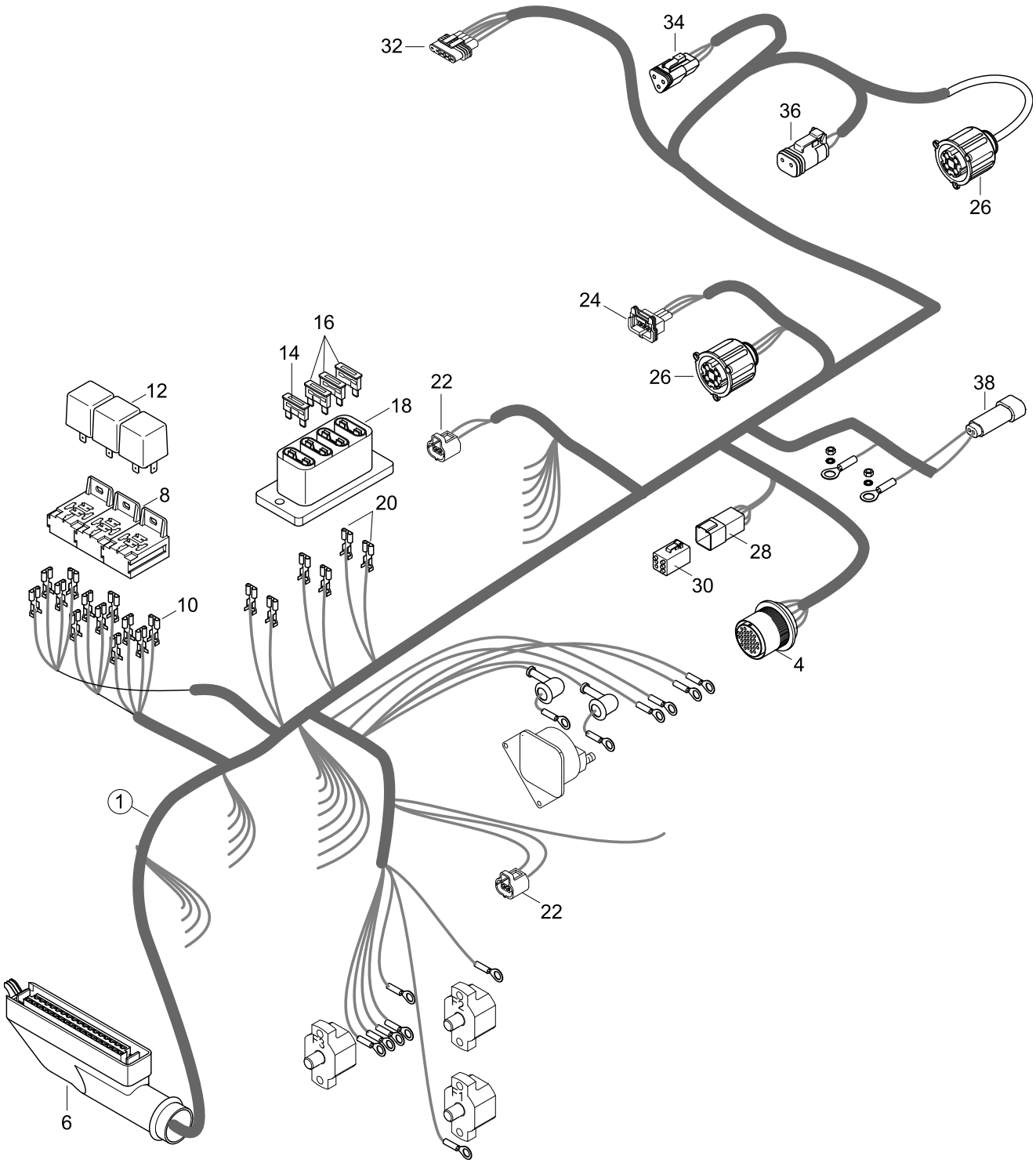

ENGINE HARNESS
48227001 -->

144 MARINE
TURBO DIESEL
+SOLAS

06056184-2

Pos.	Part.-No.	Qty	Designation	Step
1	Z002143-0	1	ENGINE HARNESS ASSY. 12V (FROM 2007)	.2
4	Z002410-0	1	CABLE-PLUG PAIR COMPL. 23-POLE	..3
6	Z002411-0	1	RECEPTACLE COMPL. ECU	..3
8	9000421-0	3	RELAY SOCKET	..3
10	3499650-0	19	RECEPTACLE 6,3-2,5	..3
12	9000183-0	3	RELAY 12V 40A	..3
14	12156	1	FUSE 5A, LIGHTBRAUN	..3
16	11345	3	FUSE 10A, RED	..3
18	2206152-0	1	FUSE CARRIER 4 WAY	..3
20	9000125-0	6	BLADE TERMINAL 6,3x2,5 / 1,5-2,5	..3
22	Z002046-1	2	CONNECTOR COOLANT TEMP. SENSOR	..3
24	Z002412-0	1	PLUG COMPL. REVOLUTION SENSOR	..3
26	Z002139-0	2	PLUG, PRESSURE SENSOR 3-POLE	..3
28	Z002415-0	1	PLUG COMPL. DIAGNOSTIC 6 WAY	..3
30	2178729-3	1	DIAGNOSTIC PLUG 6-WAY	..3
32	Z002414-0	1	CONNECTOR POTENTI. ACCELERATOR	..3
34	Z002416-0	1	PLUG POT. CONTROL ROD POSITION 3-POLE	..3
36	Z002417-0	1	PLUG COMPL. CONTROL SOLENOID 2-POLE	..3
38	Z002419-0	1	PLUG COMPL. GEAR SWITCH 2 WAY	..3

144 MARINE
TURBO DIESEL
+SOLAS

SECURETYSYSTEM, FUSES, ECU, E-BOX
--> 48221066

06064084-0

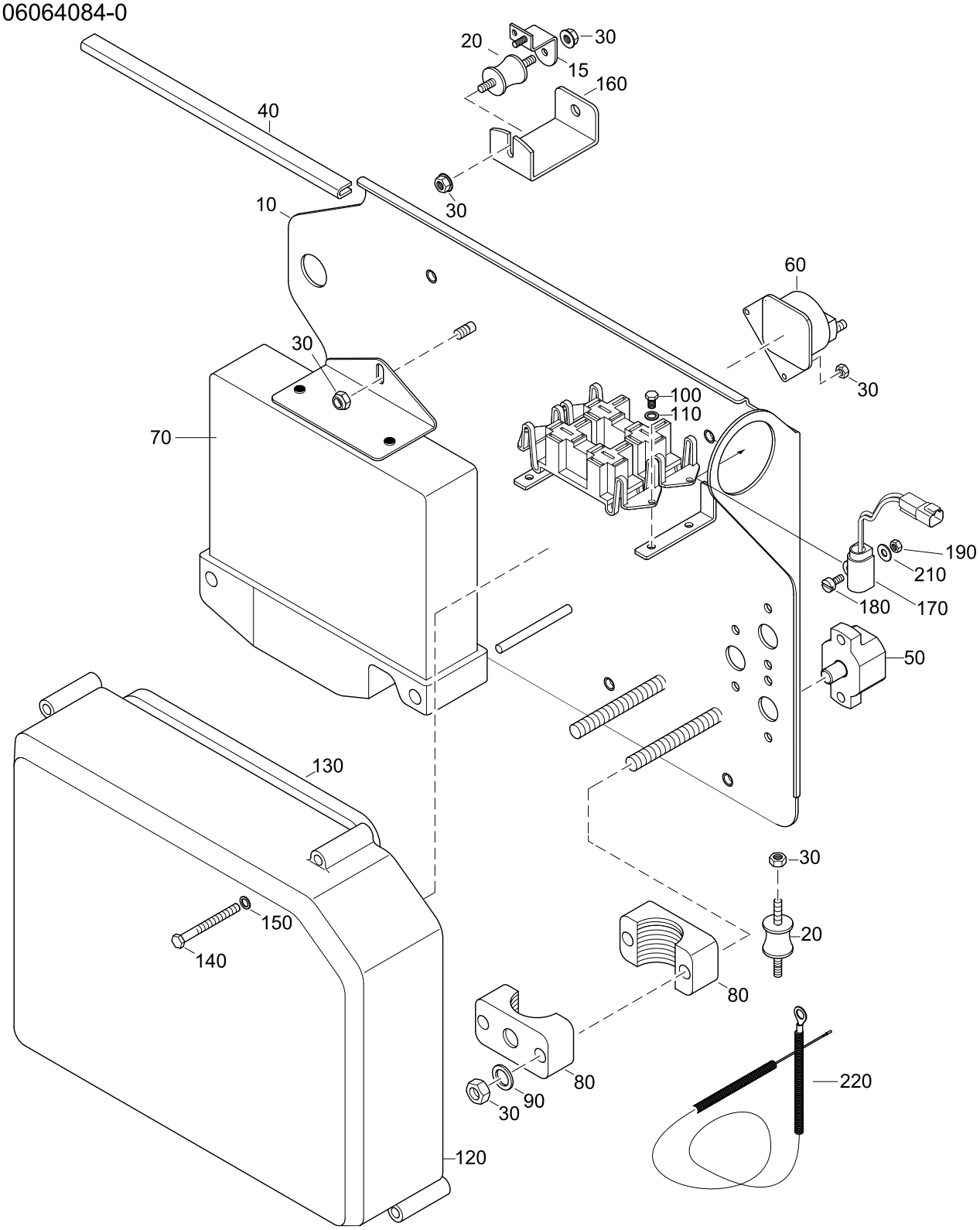

SECURETYSYSTEM, FUSES, ECU, E-BOX
--> 48221066

144 MARINE
TURBO DIESEL
+SOLAS

06064084-0

Pos.	Part.-No.	Qty	Designation	Step
10	2203723-0	1	BASEPLATE ENGINE ECU	.2
15	2203723-B	2	BRACKET BASEPLATE	..3
20	2203744-0	4	RUBBER MOUNT	.2
30	3880049-0	13	HEX.FLANGE NUT DIN 6923-M6-A2-70	.2
40	2173329-0	0.2	EDGE PROTECTOR	.2
50	O913774-0	3	AUTOMATIC CIRCUIT BREAKER 50A	.2
60	9000187-0	1	SOLENOID STARTER	.2
70	2176821-0	1	ECU 144 VTI 106kW-3800rpm (STANDARD)	.2
80	2203753-0	2	CLAMP, FASTEN ENGINE-HARNESS	.2
90	9000012-0	2	WASHER LARGE SERIES DIN 9021-6.4-140HV-A2	.2
100	2309121-1	4	CROSS REC.RAIS.CH.HD.SCR. DIN 7985-M4x10-4.8-H-A2C	.2
110	3930072-0	4	WASHER LARGE SERIES DIN 9021-4.3-A2	.2
120	2203720-0	1	COVERING, ENGINE ELECTRIC	.2
130	2171410-1	1	SEAL, COVERING ENGINE ELECTRIC	.2
140	9000003-0	5	HEX.SOCK. HD.CAP SCR. DIN 912-M5x55-A2-70	.2
150	3930069-0	5	WASHER ISO 7089-5-200HV-A2	.2
160	2203724-0	2	SUPPORT BASE PLATE	.2
170	2178971-G	1	INVERSION-SWITCH ASSY	.2
180	3800304-0	1	HEX.HD.SCR. IS0 4017-M5x12-A2-70	.2
190	3870050-0	1	HEX.NUT DIN 934-M5-A2-70	.2
210	3930069-0	1	WASHER ISO 7089-5-200HV-A2	.2
220	2178975-0	1	CABLE INVERSION-SWITCH SOLAS	.2

STEYRMOTORS
INNOVATION WITH LIGHTNESS

144 MARINE
TURBO DIESEL
+SOLAS

SECURETYSYSTEM, FUSES, ECU, E-BOX
48221067 -->

06064084-1

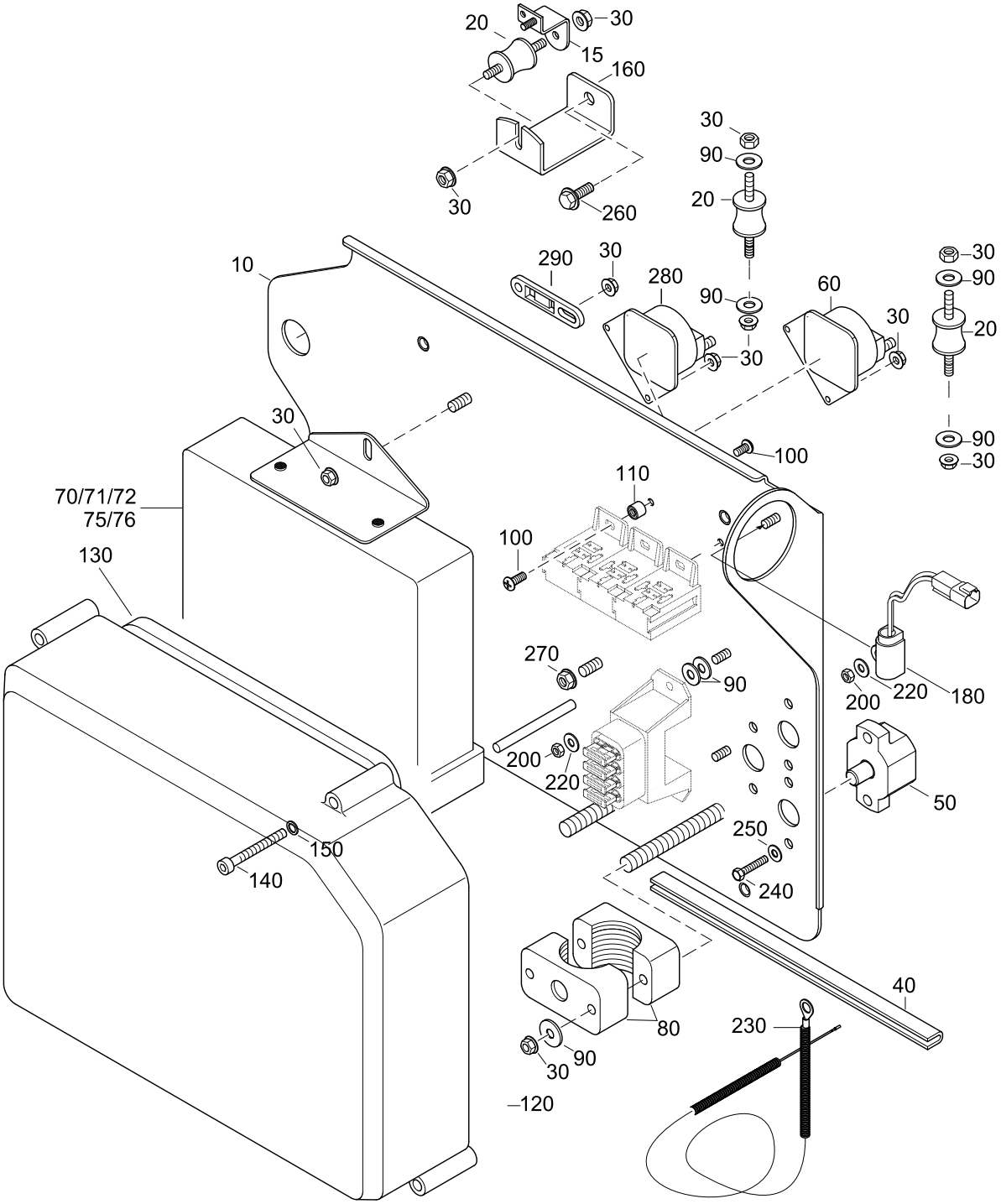

SECURETYSYSTEM, FUSES, ECU, E-BOX
48221067 -->

144 MARINE
TURBO DIESEL
+SOLAS

06064084-1

Pos.	Part.-No.	Qty	Designation	Step
10	2203723-1	1	BASE PLATE	.2
15	2203723-B	1	BRACKET BASEPLATE	..3
20	2203744-0	4	RUBBER MOUNT	.2
30	3880049-0	13	HEX.FLANGE NUT DIN 6923-M6-A2-70	.2
40	2173329-0	0.2	EDGE PROTECTOR	.2
50	O913774-0	3	AUTOMATIC CIRCUIT BREAKER 50A	.2
60	9000187-0	1	SOLENOID STARTER	.2
70	2176821-0	1	ECU 144 VTI 106kW-3800rpm —>48226999	.2
71	2176844-3	1	ECU 144 VTI 106kW-3800rpm 48227001—>48228136	.2
72	2176844-6	1	ECU 144 VTI 106kW-3800rpm 48228137—>	.2
75	2176821-6	1	ECU 144 MHI 106kW-3800rpm —>48226999	.2
76	2176844-2	1	ECU 144 MHI 106kW-3800rpm 48227001—>	.2
80	2203753-0	2	CLAMP, FASTEN ENGINE-HARNESS	.2
90	9000012-0	10	WASHER LARGE SERIES DIN 9021-6.4-140HV-A2	.2
100	9000215-1	4	CROSS RECESS PAN HD.SCR. ISO 7045-M5x6-A2-50-H	.2
110	2179004-0	2	SILENT BLOCK M5	.2
120	2203720-0	1	COVERING, ENGINE ELECTRIC	.2
130	2171410-1	1	SEAL, COVERING ENGINE ELECTRIC	.2
140	9000003-0	5	HEX.SOCK. HD.CAP SCR. DIN 912-M5x55-A2-70	.2
150	3930069-0	5	WASHER ISO 7089-5-200HV-A2	.2
160	2203724-0	2	SUPPORT BASE PLATE	.2
180	2178971-G	1	INVERSION-SWITCH ASSY	.2
200	3870050-0	3	HEX.NUT DIN 934-M5-A2-70	.2
220	3930069-0	3	WASHER ISO 7089-5-200HV-A2	.2
230	2178975-0	1	CABLE INVERSION-SWITCH SOLAS	.2
240	9000424-0	6	HEX.HD.SCR. ISO 4017-8/32UNCx20-A2-70	.2
250	3930072-0	6	WASHER LARGE SERIES DIN 9021-4.3-A2	.2
260	9000305-0	2	HEX.FLANGE BOLT EN 1665-M8x20-10.9-DAC	.2
270	3880049-0	1	HEX.FLANGE NUT DIN 6923-M6-A2-70	.2
280	2206161-0	1	POWER SOLENOID 12V	.2
290	2178870-0	1	FIXTURE, CABLE TIE	.2

144 MARINE
TURBO DIESEL
+SOLAS

INSTRUMENTPANEL (STANDARD)
TILL -->2010

06084084-0

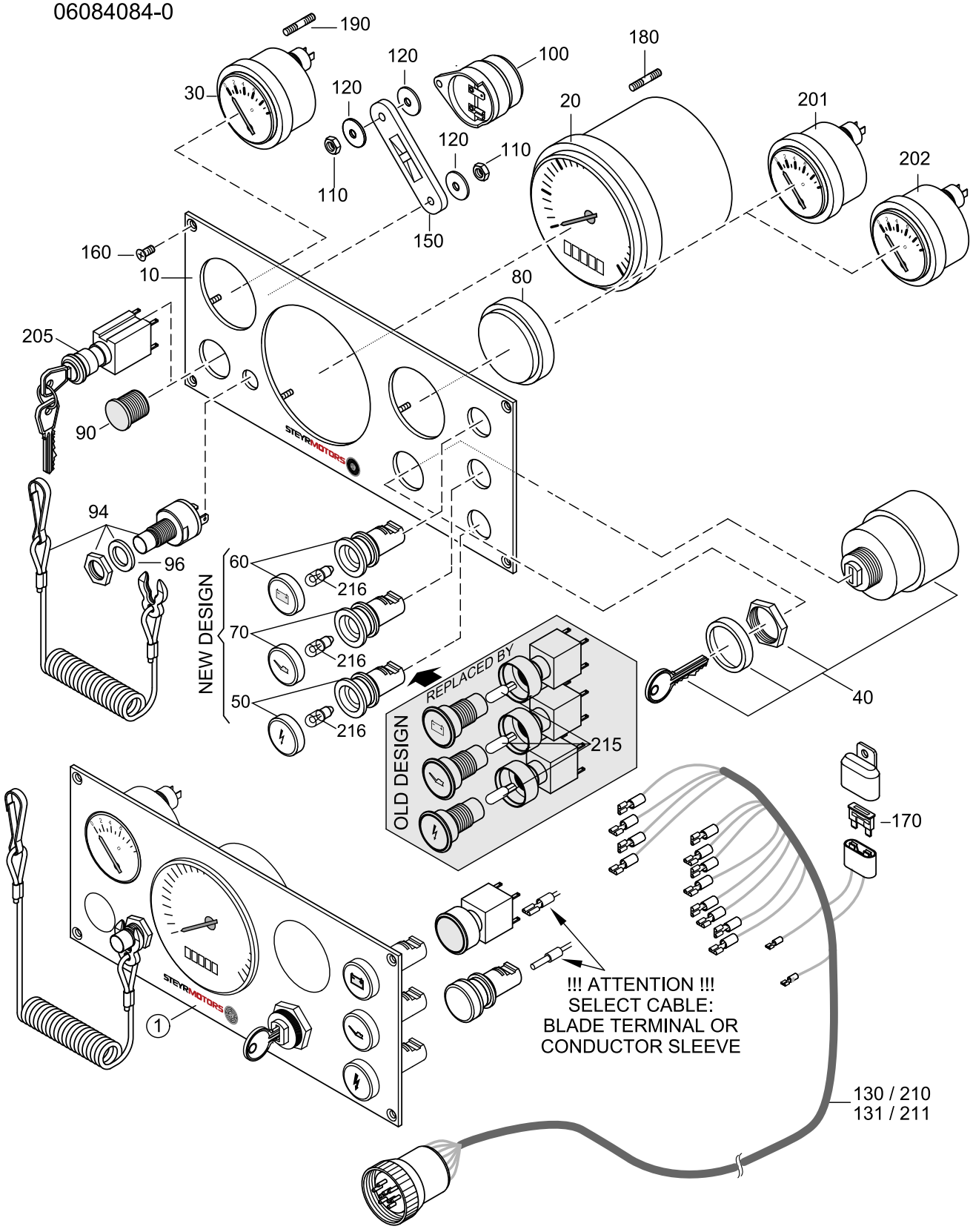

INSTRUMENTPANEL (STANDARD)
TILL -->2010

144 MARINE
TURBO DIESEL
+SOLAS

06084084-0

Pos.	Part.-No.	Qty	Designation	Step
1	Z002635-0	1	SPARE PANEL ASSY. (ALTERN. ISKRA)	.2
10	2178831-3	1	INSTRUMENT PANEL	..3
20	2178756-3	1	REVOLU. & OPERA. HOUR COUNTER	..3
30	2178229-2	1	COOLANT TEMPERATURE GAUGE	..3
40	2178761-4	1	GLOW-START SWITCH ASSY.(SPARE)	..3
50	2179290-0	1	WARNING-LIGHT CHECK ENGI. ASSY	..3
60	2179291-0	1	WARNING-LIGHT BATTERY CHARGE ASSY. 12V	..3
70	2179292-0	1	WARNING-LIGHT ENGINE-OIL ASSY.	..3
80	2178759-2	1	BLIND COVER	..3
90	2179320-0	1	BLIND PLUG, BLACK	..3
94	Z002073-0	1	EMERGENCY CUTOFF SWITCH KIT	..3
96	2176170-0	1	O-RING 15 x 2	..3
100	2178760-1	1	HORN AUDIBLE WARNING	..3
110	3870051-0	2	HEX.NUT ISO 4032-M4-A2-70	..3
120	3930072-0	2	WASHER LARGE SERIES DIN 9021-4.3-A2	..3
130	2206290-1	1	CABLE ASSY. INSTRUMENT 7m (BLADE TERMINAL)	..3
131	Z002669-0	1	CABLE ASSY. INSTRUMENT 7m (CONDUCTOR SLEEVE) SPARE PART	..3
160	9000192-0	4	CR.REC.COUNT.SUNK HD.TPG.SCR. ISO 7050-ST3.5x16	..3
170	11345	1	FUSE 10A, RED	..3
190	2206167-1	1	STUD	..3
201	2178227-2	1	OIL PRESSURE GAUGE 10 BAR (ACCESSORY)	.2
202	2178231-1	1	VOLTMETER 12V (ACCESSORY)	.2
205	2178761-2	1	KEY-SWITCH CONSTANT REVOLUTION (ACCESSORY)	.2
210	2206290-4	1	CABLE ASSY. INSTRUMENT 1,5m (BLADE TERMINAL)	.2
211	Z002670-0	1	CABLE ASSY. INSTRUMENT 1.5m (CONDUCTOR SLEEVE) SPARE PART	.2
215	2178242-4	3	GLASS SOCKET LAMP 12V 2W x 4,6D (OLD DESIGN)	.2
216	2179162-0	3	MINIATUR LAMP 12V/2W 10x28 (NEW DESIGN)	.2

STEYRMOTORS
INNOVATION WITH LIGHTNESS

144 MARINE
TURBO DIESEL
+SOLAS

INSTRUMENTPANEL (STANDARD) FROM 2010-->

06072184-1

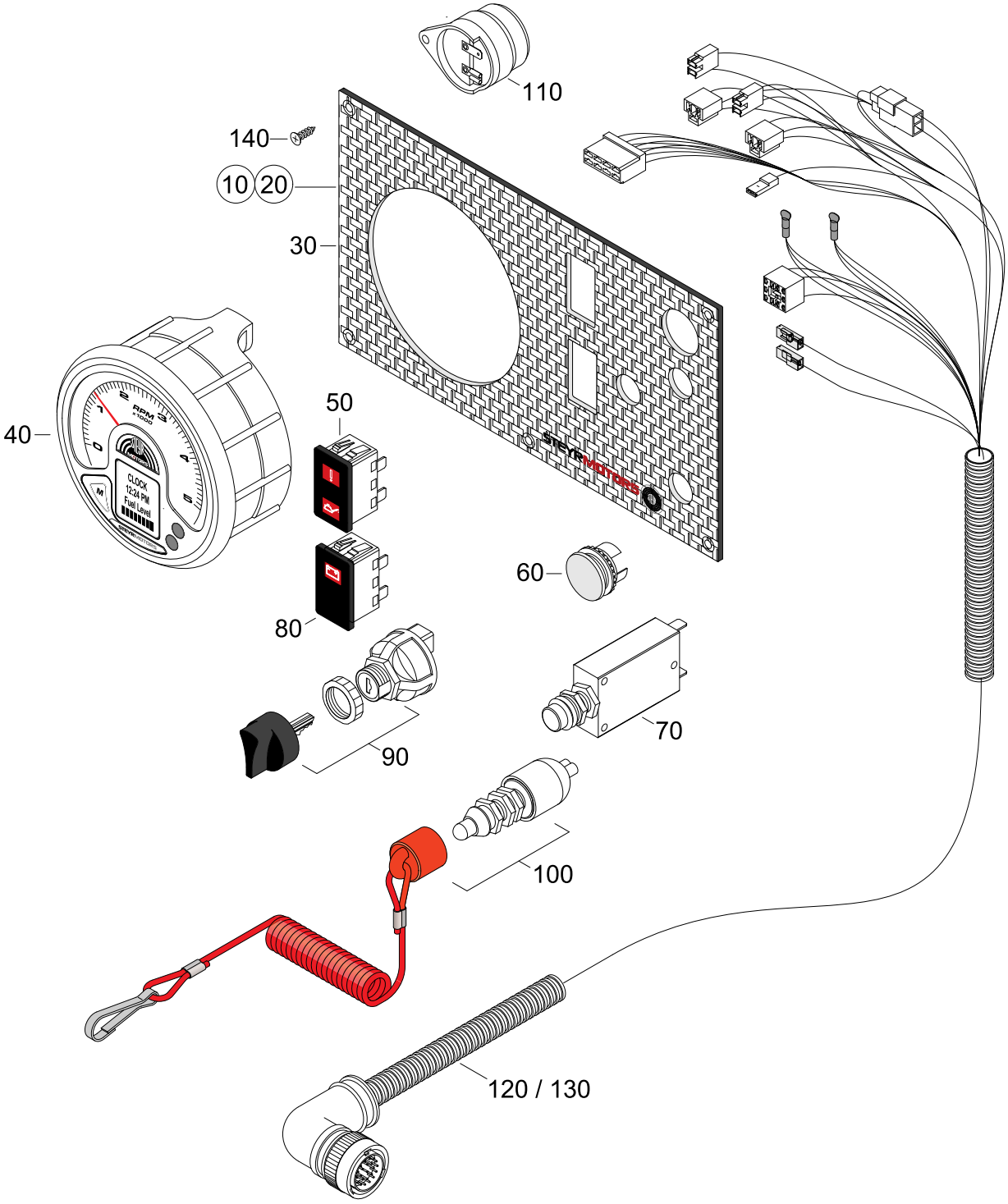

INSTRUMENTPANEL (STANDARD)
FROM 2010-->

144 MARINE
TURBO DIESEL
+SOLAS

06072184-1

Pos.	Part.-No.	Qty	Designation	Step
10	2179963-0	1	INSTR. PANEL ASSY. (LED) 12V 7m	.2
20	2179965-0	1	INSTR.PANEL ASSY. (LED) 12V 1,5m	.2
30	2179981-0	1	FRONT PLATE, INSTRUMENT PANEL - STANDARD	..3
40	2179971-0	1	REVOLUTION COUNTER	..3
50	Z002196-0	1	WARNING LED, CHECK ENGINE & OIL PRESSURE	..3
60	2179320-0	1	BLIND PLUG, BLACK	..3
70	Z002180-0	1	THERMO PROTECTION SWITCH ASSY.	..3
80	Z002197-0	1	WARNING LED, BATTERY CHARGE	..3
90	2179975-0	1	GLOW-START SWITCH	..3
100	2179978-0	1	EMERGENCY CUTOFF SWITCH	..3
110	2178760-1	1	HORN AUDIBLE WARNING	..3
120	2180073-0	1	CABLE ASSY. INSTRUMENT 7m	..3
130	2180075-0	1	CABLE ASSY. INSTRUMENT 1,5m	..3
140	9000817-0	6	CR.REC.COUNT.SUNK HD.TPG.SCR. 3.5x16	..3

144 MARINE TURBO DIESEL +SOLAS

INSTRUMENTPANEL SOLAS (STANDARD) TILL -->2010

06094084-0

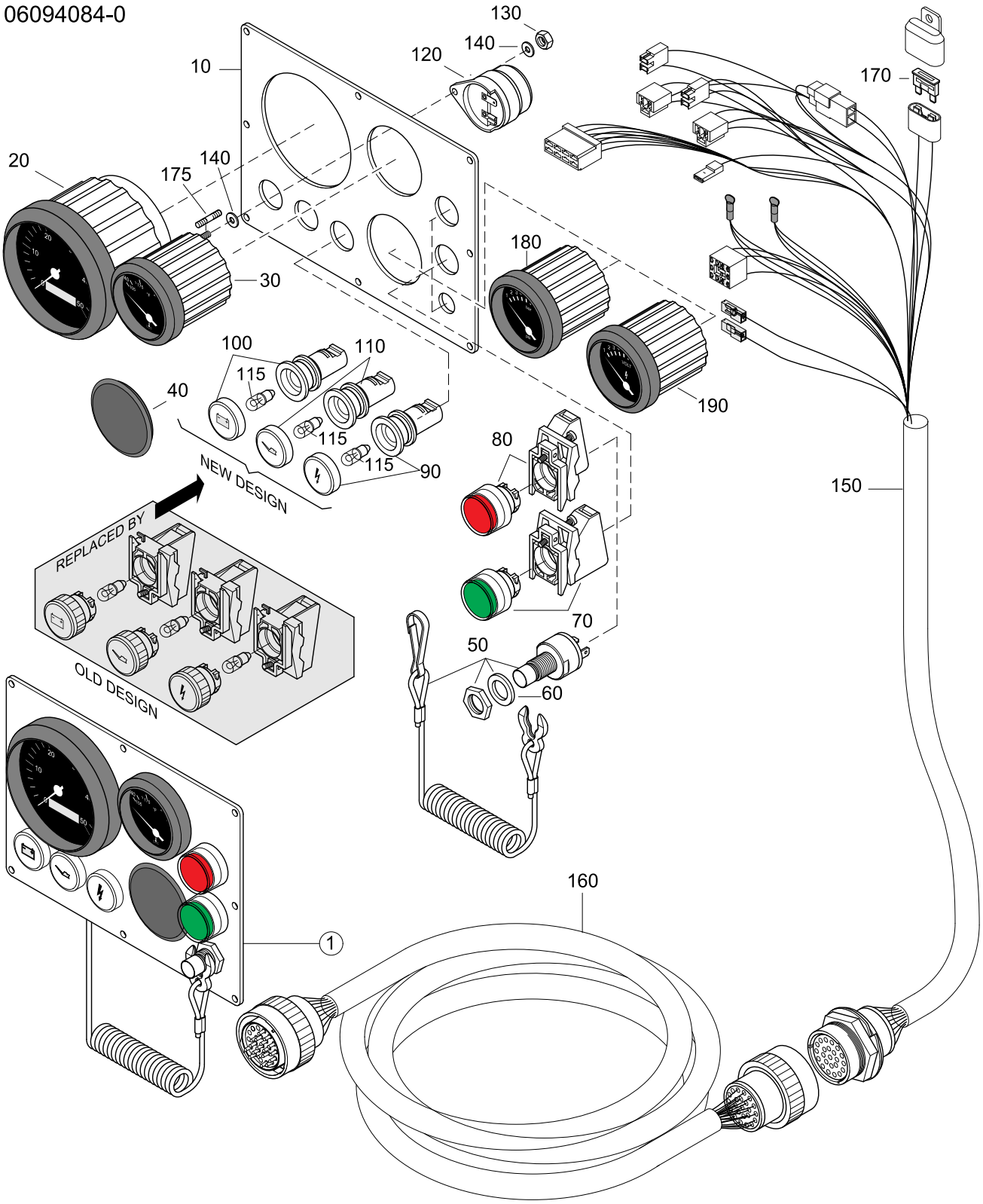

INSTRUMENTPANEL SOLAS (STANDARD)
TILL -->2010

144 MARINE
TURBO DIESEL
+SOLAS

06094084-0

Pos.	Part.-No.	Qty	Designation	Step
1	Z002122-0	1	SPARE PANEL ASSY. SOLAS (ALTERN. ISKRA)	.2
10	2178831-4	1	INSTRUMENT PANEL SOLAS	..3
20	2178756-3	1	REVOLU. & OPERA. HOUR COUNTER	..3
30	2178229-2	1	COOLANT TEMPERATURE GAUGE	..3
40	2178759-2	1	BLIND COVER	..3
50	Z002073-0	1	EMERGENCY CUTOFF SWITCH KIT	..3
60	2176170-0	1	O-RING 15 x 2	..3
70	2179294-0	1	SWITCH ASSY. START GREEN	..3
80	2179293-5	1	IGNITION SWITCH RED ASSY.	..3
90	2179290-0	1	WARNING-LIGHT CHECK ENGI. ASSY	..3
100	2179291-0	1	WARNING-LIGHT BATTERY CHARGE ASSY. 12V	..3
110	2179292-0	1	WARNING-LIGHT ENGINE-OIL ASSY.	..3
115	2179262-0	3	INVERTER/CHARGER 2500W/12VDC 130A/220V/50Hz	..3
120	2178760-1	1	HORN AUDIBLE WARNING	..3
130	3870051-0	2	HEX.NUT ISO 4032-M4-A2-70	..3
140	3930072-0	2	WASHER LARGE SERIES DIN 9021-4.3-A2	..3
150	Z002671-0	1	CABLE ASSY. INSTR. 1.5m SOLAS (SPARE PART)	..3
160	2206291-1	1	INTERMEDIATE CABLE 5m SAME 23-WAY CON.	..3
170	11345	1	FUSE 10A, RED	..3
175	2206167-1	1	STUD	..3
180	2178227-2	1	OIL PRESSURE GAUGE 10 BAR (ACCESSORY)	.2
190	2178231-1	1	VOLTMETER 12V (ACCESSORY)	.2

STEYRMOTORS
INNOVATION WITH LIGHTNESS

144 MARINE
TURBO DIESEL
+SOLAS

INSTRUMENTPANEL SOLAS (STANDARD) FROM 2010-->

06092184-1

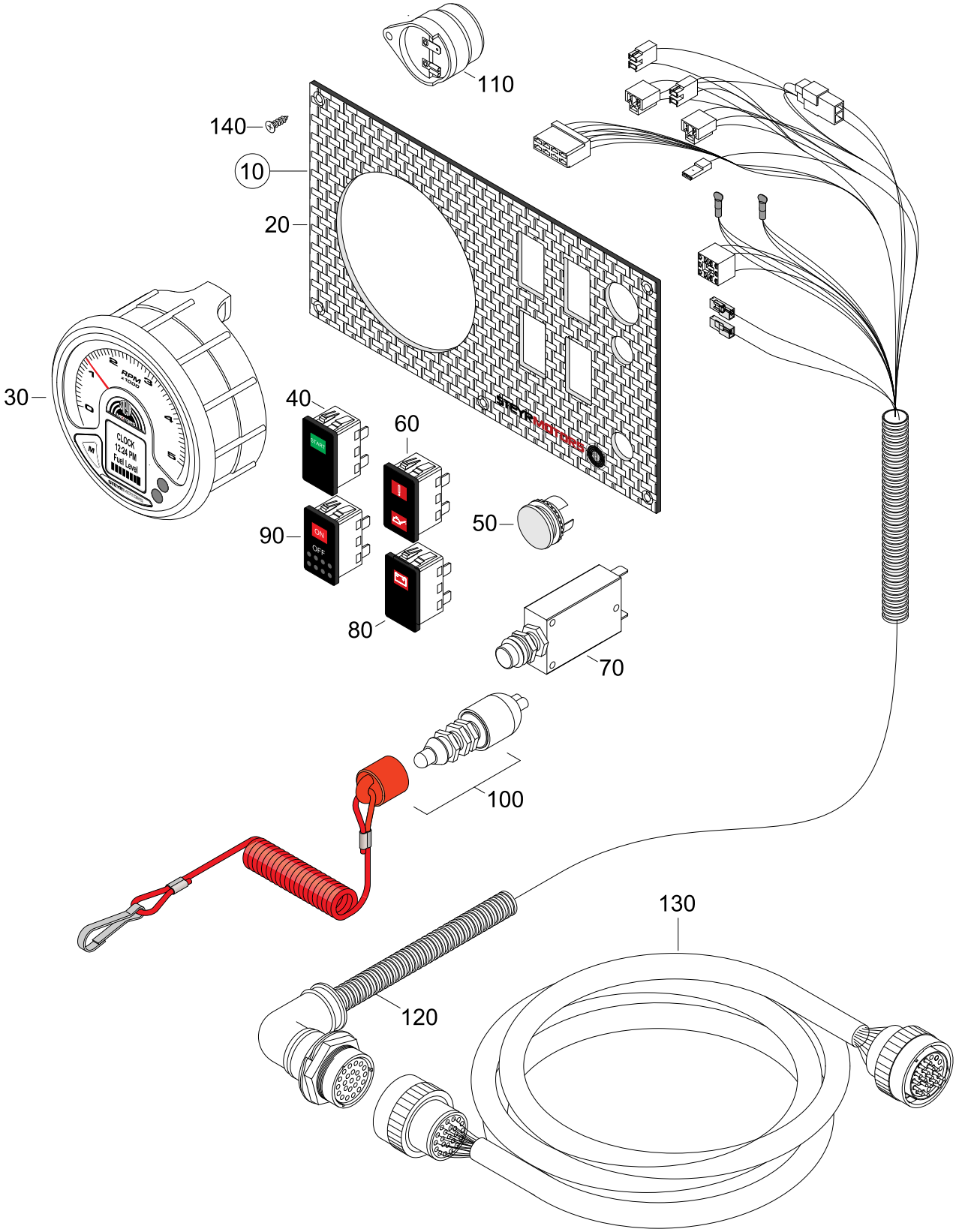

INSTRUMENTPANEL SOLAS (STANDARD) FROM 2010-->

144 MARINE
TURBO DIESEL
+SOLAS

06092184-1

Pos.	Part.-No.	Qty	Designation	Step
10	2179964-0	1	INSTRUMENT PANEL ASSY. (LED) 12V SOLAS	.2
20	2179982-0	1	FRONT PLATE, INSTRUMENT PANEL - SOLAS	..3
30	2179971-0	1	REVOLUTION COUNTER	..3
40	Z002198-0	1	START SWITCH, GREEN	..3
50	2179320-0	1	BLIND PLUG, BLACK	..3
60	Z002196-0	1	WARNING LED, CHECK ENGINE & OIL PRESSURE	..3
70	Z002180-0	1	THERMO PROTECTION SWITCH ASSY.	..3
80	Z002197-0	1	WARNING LED, BATTERY CHARGE	..3
90	Z002199-0	1	IGNITION SWITCH	..3
100	2179978-0	1	EMERGENCY CUTOFF SWITCH	..3
110	2178760-1	1	HORN AUDIBLE WARNING	..3
120	2180074-0	1	CABLE ASSY. INSTRUMENT	..3
130	2206291-1	1	INTERMEDIATE CABLE 5m	..3
140	9000817-0	6	CR.REC.COUNT.SUNK HD.TPG.SCR. 3.5x16	..3

144 MARINE
TURBO DIESEL
+SOLAS

DISPLAY (ACCESSORY)

06106184-2

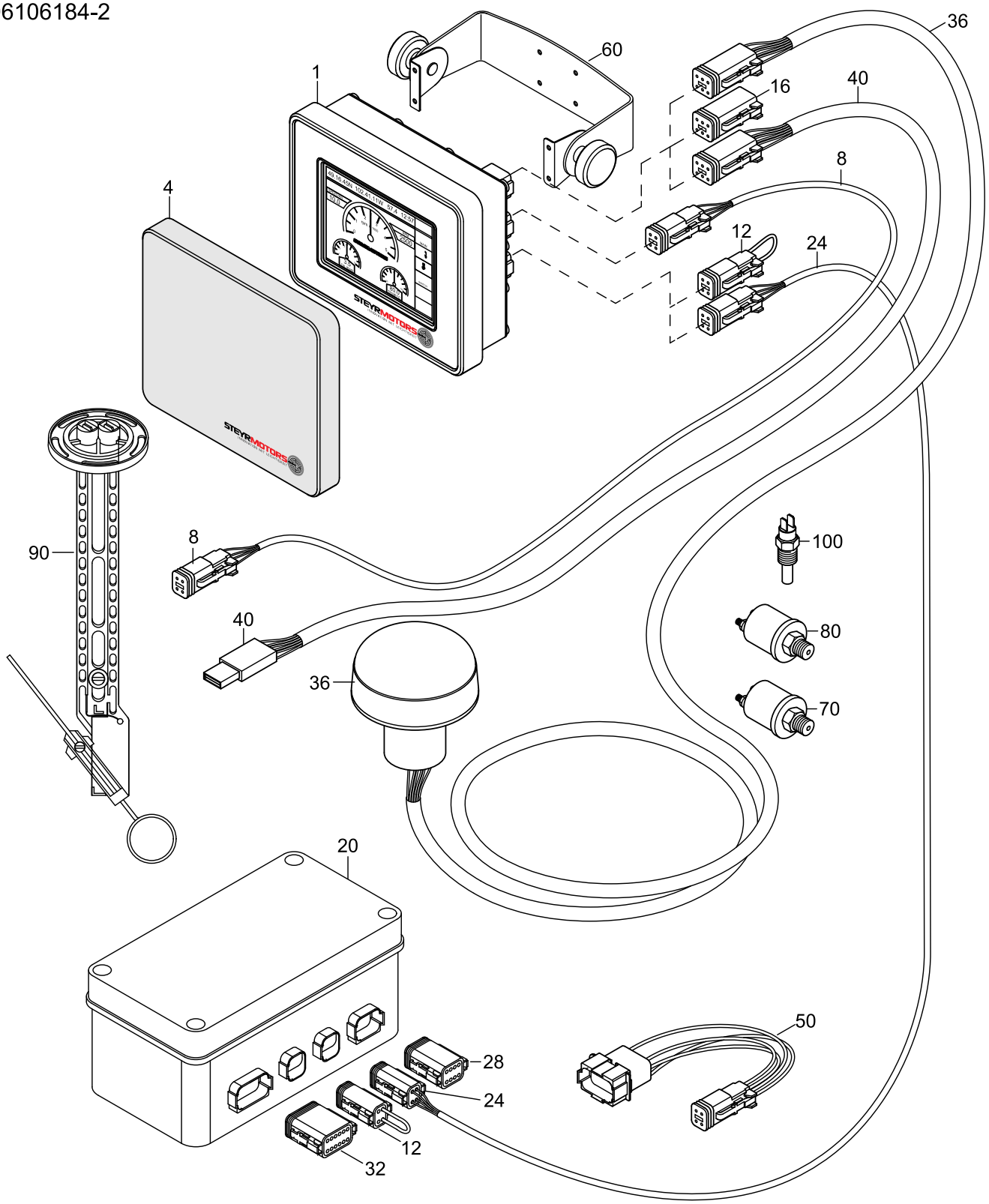

DISPLAY (ACCESSORY)

144 MARINE
TURBO DIESEL
+SOLAS

06106184-2

Pos.	Part.-No.	Qty	Designation	Step
1	Z002132-0	1	STEYR CONTROL CENTER (SPARE PART)	.2
4	2179637-0	1	PROTECTIVE COVERING - SCC	..3
8	2206313-0	1	CONNECTING CABLE SCC->PANEL (4-POLE)	..3
12	2206314-0	1	CONNECTOR CAN-TERMINATOR (4-POLE)	..3
16	2179638-0	1	DUMMY PLUG 6-POLE	..3
20	2179156-2	1	I/O BOX	.2
24	2206315-0	1	CONNECTING CABLE I/O BOX -> SCC (4-POLE)	..3
28	2179639-0	1	DUMMY PLUG 8-POLE	..3
32	2179640-0	1	DUMMY PLUG 12-POLE	..3
36	2179641-0	1	GPS-SENSOR ASSY	.2
40	2179607-0	1	SCC CONFIGURATIONS CABLE 1,8m USB 2.0	.2
50	2179636-0	1	ADAPTER CABLE SPORTLINE TO SCC (8-POLE TO 4-POLE)	.2
60	Z002177-0	1	KIT MOUNTING BRACHETS F. SCC	.2
70	Z002640-0	1	OIL PRESSURE SENSOR 2-POLE (ACCESSORY)	.2
80	2179519-0	1	OIL PRESSURE SENSOR ZF-GEARBOX	.2
90	2179331-0	1	FUEL TANK SENSOR	.2
100	2179520-0	1	TEMPERATURE SENSOR, GEARBOX OIL	.2

STEYRMOTORS
INNOVATION WITH LIGHTNESS

144 MARINE
TURBO DIESEL
+SOLAS

SWITCH PANEL FOR DISPLAY
TILL -->2010

06114084-0

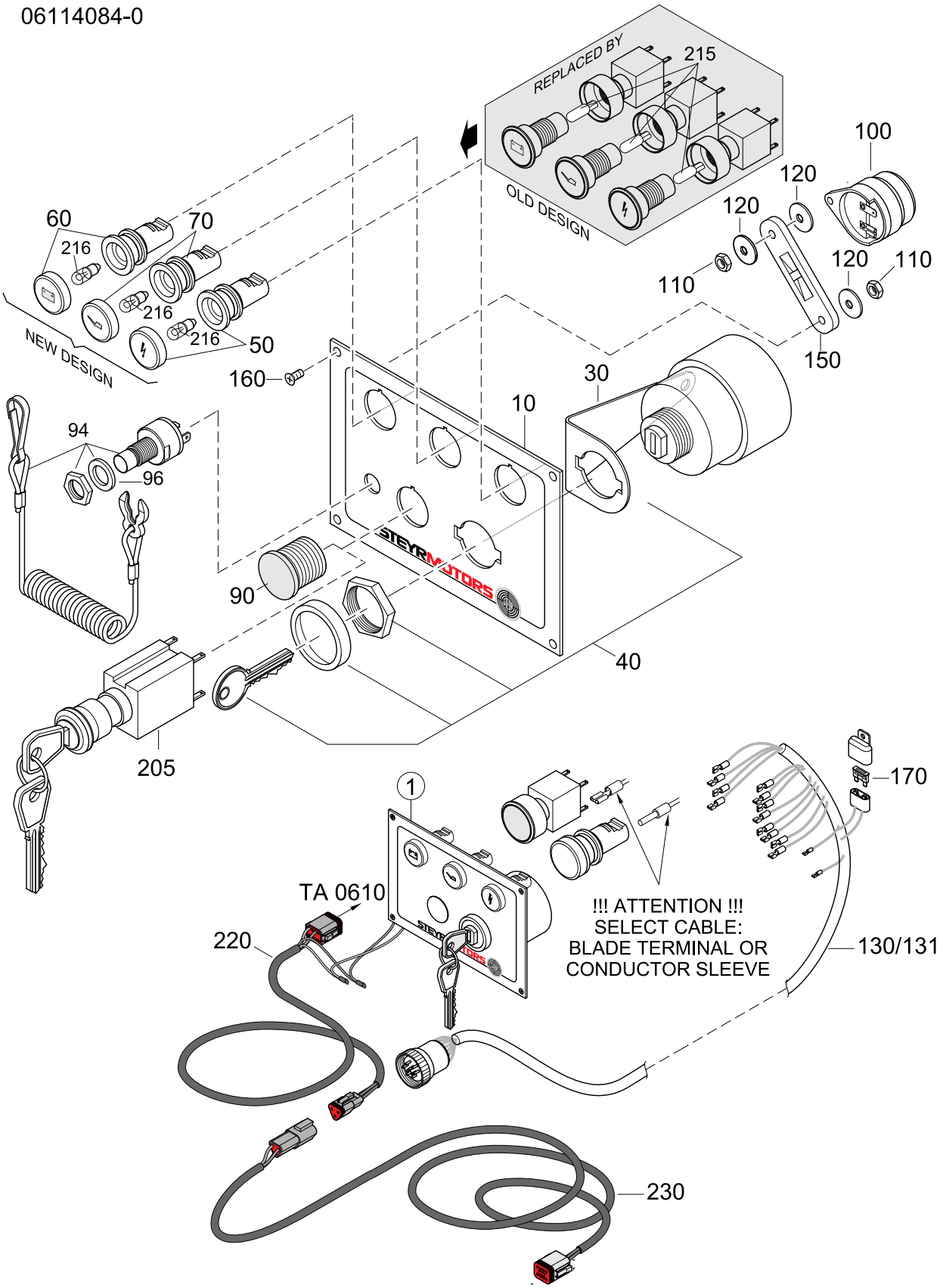

SWITCH PANEL FOR DISPLAY
TILL -->2010

144 MARINE
TURBO DIESEL
+SOLAS

06114084-0

Pos.	Part.-No.	Qty	Designation	Step
1	Z002123-0	1	SWITCH PANEL ASSY. (ALTERN. ISKRA)	.2
10	2179134-1	1	INSTRUMENT PANEL	..3
30	2179173-0	1	SHACKLE STRAIN RELIEF, PANEL (NEW DESIGN)	..3
40	2178761-4	1	GLOW-START SWITCH ASSY.(SPARE)	..3
50	2179290-0	1	WARNING-LIGHT CHECK ENGI. ASSY	..3
60	2179291-0	1	WARNING-LIGHT BATTERY CHARGE ASSY. 12V	..3
70	2179292-0	1	WARNING-LIGHT ENGINE-OIL ASSY.	..3
90	2179320-0	1	BLIND PLUG, BLACK	..3
94	Z002073-0	1	EMERGENCY CUTOFF SWITCH KIT	..3
96	2176170-0	1	O-RING 15 x 2	..3
100	2178760-1	1	HORN AUDIBLE WARNING	..3
110	3870051-0	4	HEX.NUT ISO 4032-M4-A2-70	..3
120	3930072-0	6	WASHER LARGE SERIES DIN 9021-4.3-A2	..3
130	2206290-1	1	CABLE ASSY. INSTRUMENT 7m (BLADE TERMINAL)	..3
131	Z002669-0	1	CABLE ASSY. INSTRUMENT 7m (CONDUCTOR SLEEVE) SPARE PART	..3
150	2178870-1	1	FIXTURE, CABLE TIE (OLD DESIGN)	..3
160	9000192-0	4	CR.REC.COUNT.SUNK HD.TPG.SCR. ISO 7050-ST3.5x16	..3
170	11345	1	FUSE 10A, RED	..3
205	2178761-2	1	KEY-SWITCH CONSTANT REVOLUTION (ACCESSORY)	..3
215	2178242-4	3	GLASS SOCKET LAMP 12V 2W x 4,6D (OLD DESIGN)	..3
216	2179162-0	3	MINIATUR LAMP 12V/2W 10x28 (NEW DESIGN)	..3
220	Z002131-0	1	CONNECTING CABLE-CANBUS(SPARE) WITH CONNECTOR	.2
230	2179150-1	1	INTERMEDIATE CABLE - CANBUS WITH CONNECTOR	.2

STEYRMOTORS
INNOVATION WITH LIGHTNESS

144 MARINE
TURBO DIESEL
+SOLAS

SWITCH PANEL FOR DISPLAY FROM 2010-->

06112184-1

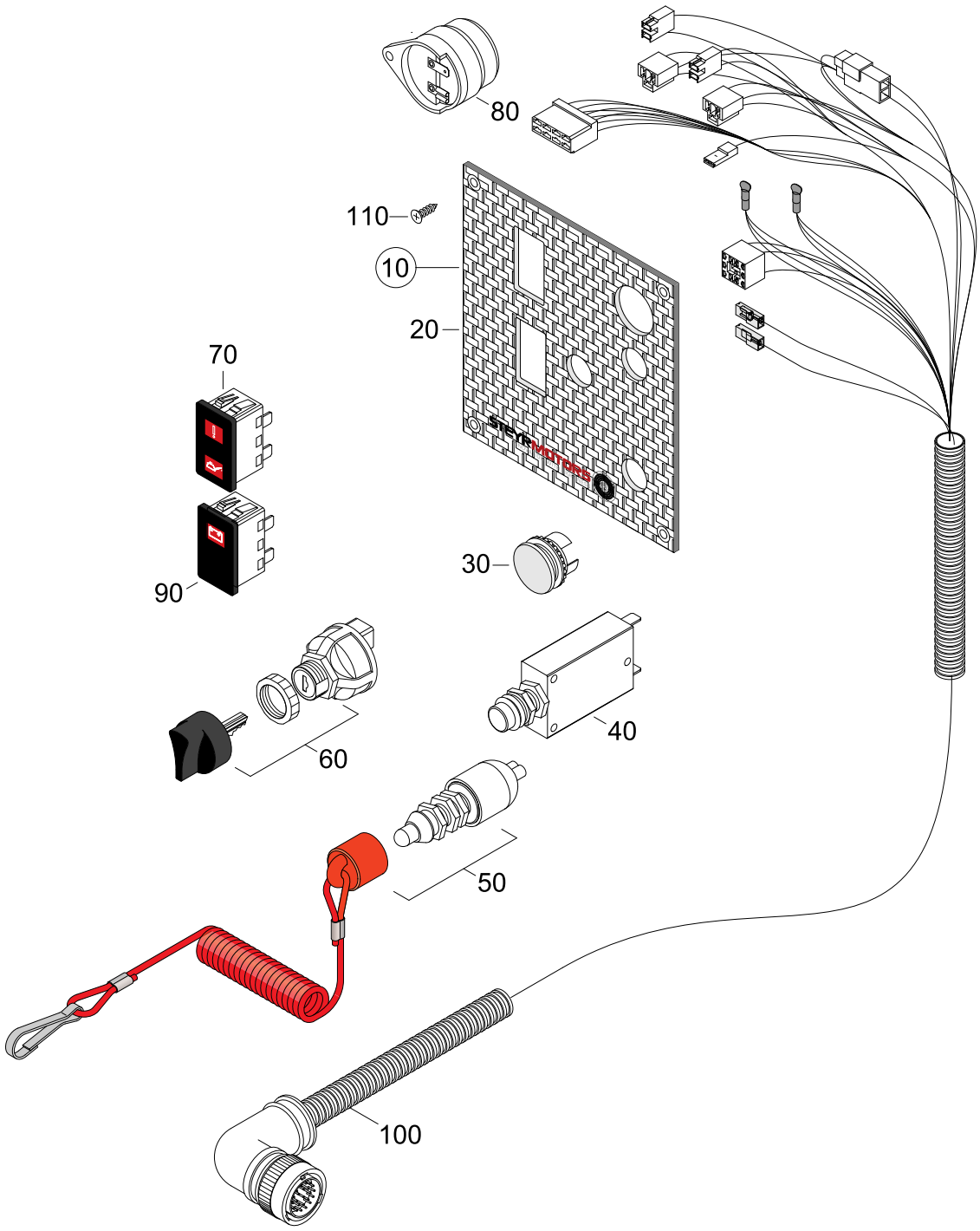

SWITCH PANEL FOR DISPLAY FROM 2010-->

144 MARINE
TURBO DIESEL
+SOLAS

06112184-1

Pos.	Part.-No.	Qty	Designation	Step
10	2179966-0	1	SWITCH PANEL ASSY. (LED) (FOR SCC-DISPLAY)	.2
20	2179983-0	1	FRONT PLATE, SWITCH PANEL	..3
30	2179320-0	1	BLIND PLUG, BLACK	..3
40	Z002180-0	1	THERMO PROTECTION SWITCH ASSY.	..3
50	2179978-0	1	EMERGENCY CUTOFF SWITCH	..3
60	2179975-0	1	GLOW-START SWITCH	..3
70	Z002196-0	1	WARNING LED, CHECK ENGINE & OIL PRESSURE	..3
80	2178760-1	1	HORN AUDIBLE WARNING	..3
90	Z002197-0	1	WARNING LED, BATTERY CHARGE	..3
100	2180076-0	1	CABLE ASSY. SWITCH PANEL	..3
110	9000817-0	4	CR.REC.COUNT.SUNK HD.TPG.SCR. 3.5x16	..3

STEYRMOTORS
INNOVATION WITH LIGHTNESS

144 MARINE
TURBO DIESEL
+SOLAS

PUSH BUTTON PANEL SOLAS FOR DISPLAY TILL -->2010

06124084-0

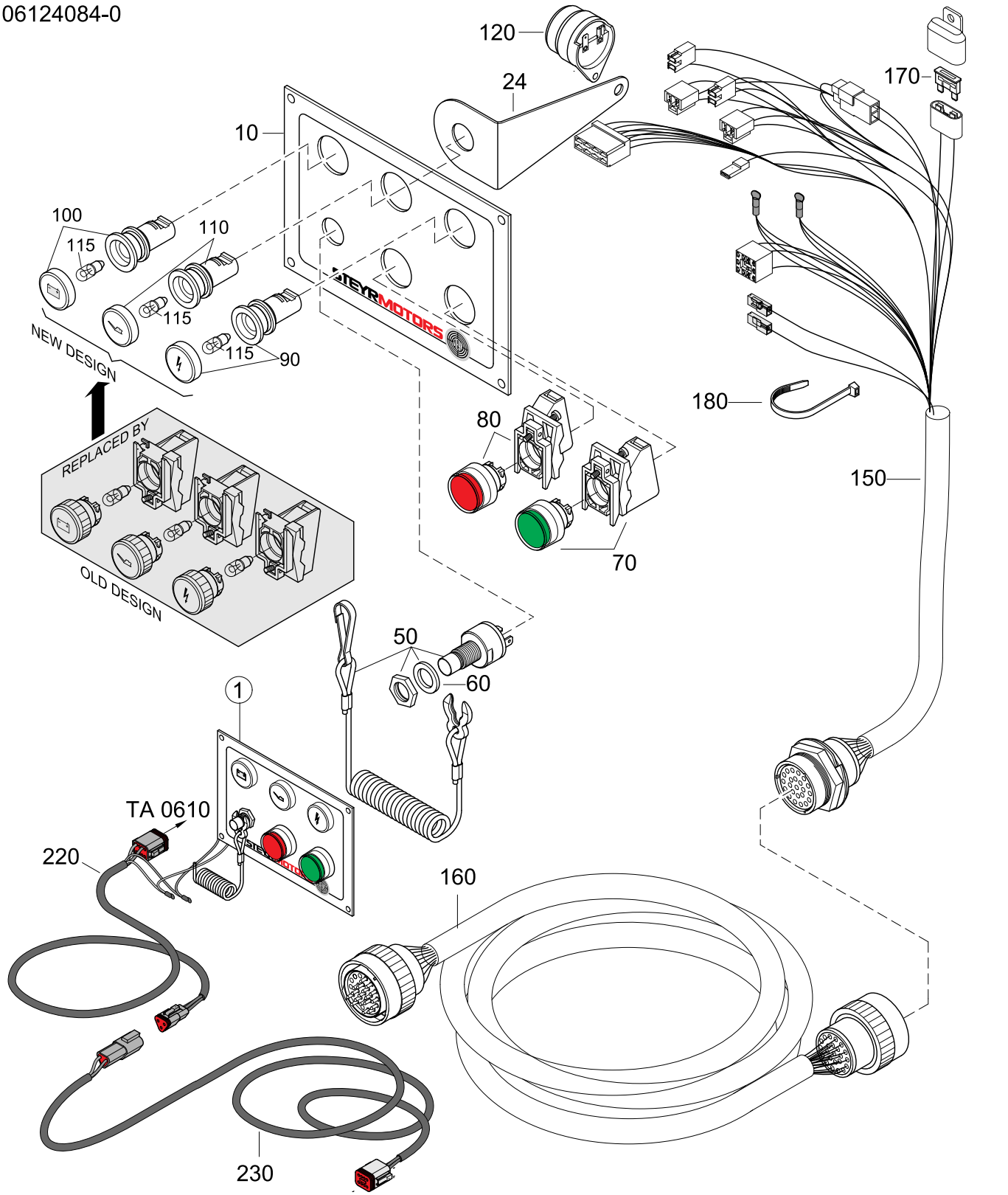

PUSH BUTTON PANEL SOLAS FOR DISPLAY TILL -->2010

144 MARINE
TURBO DIESEL
+SOLAS

06124084-0

Pos.	Part.-No.	Qty	Designation	Step
1	Z002124-0	1	PUSH BUTTON PANEL ASSY. SOLAS (ALTERN. ISKRA)	.2
10	2179135-1	1	BASE PLATE INSTRUMENT PANEL SOLAS	..3
24	2179173-1	1	SHACKLE STRAIN RELIEF, PANEL	..3
50	Z002073-0	1	EMERGENCY CUTOFF SWITCH KIT	..3
60	2176170-0	1	O-RING 15 x 2	..3
70	2179294-0	1	SWITCH ASSY. START GREEN	..3
80	2179293-0	1	IGNITION SWITCH RED ASSY.	..3
90	2179290-0	1	WARNING-LIGHT CHECK ENGI. ASSY	..3
100	2179291-0	1	WARNING-LIGHT BATTERY CHARGE ASSY. 12V	..3
110	2179292-0	1	WARNING-LIGHT ENGINE-OIL ASSY.	..3
115	2179162-0	3	MINIATUR LAMP 12V/2W 10x28	..3
120	2178760-1	1	HORN AUDIBLE WARNING	..3
130	3870051-0	2	HEX.NUT ISO 4032-M4-A2-70	..3
140	3930072-0	2	WASHER LARGE SERIES DIN 9021-4.3-A2	..3
150	Z002671-0	1	CABLE ASSY. INSTR. 1.5m SOLAS (SPARE PART)	..3
160	2206291-1	1	INTERMEDIATE CABLE 5m SAME 23-WAY CON.	..3
170	11345	1	FUSE 10A, RED	..3
180	3171035-0	6	TIE STRAP N 05199-B4,8x180	..3
220	Z002131-0	1	CONNECTING CABLE-CANBUS(SPARE) WITH CONNECTOR	.2
230	2179150-1	1	INTERMEDIATE CABLE - CANBUS WITH CONNECTOR	.2

STEYRMOTORS
INNOVATION WITH LIGHTNESS

144 MARINE
TURBO DIESEL
+SOLAS

PUSH BUTTON PANEL SOLAS FOR DISPLAY FROM 2010-->

06122184-1

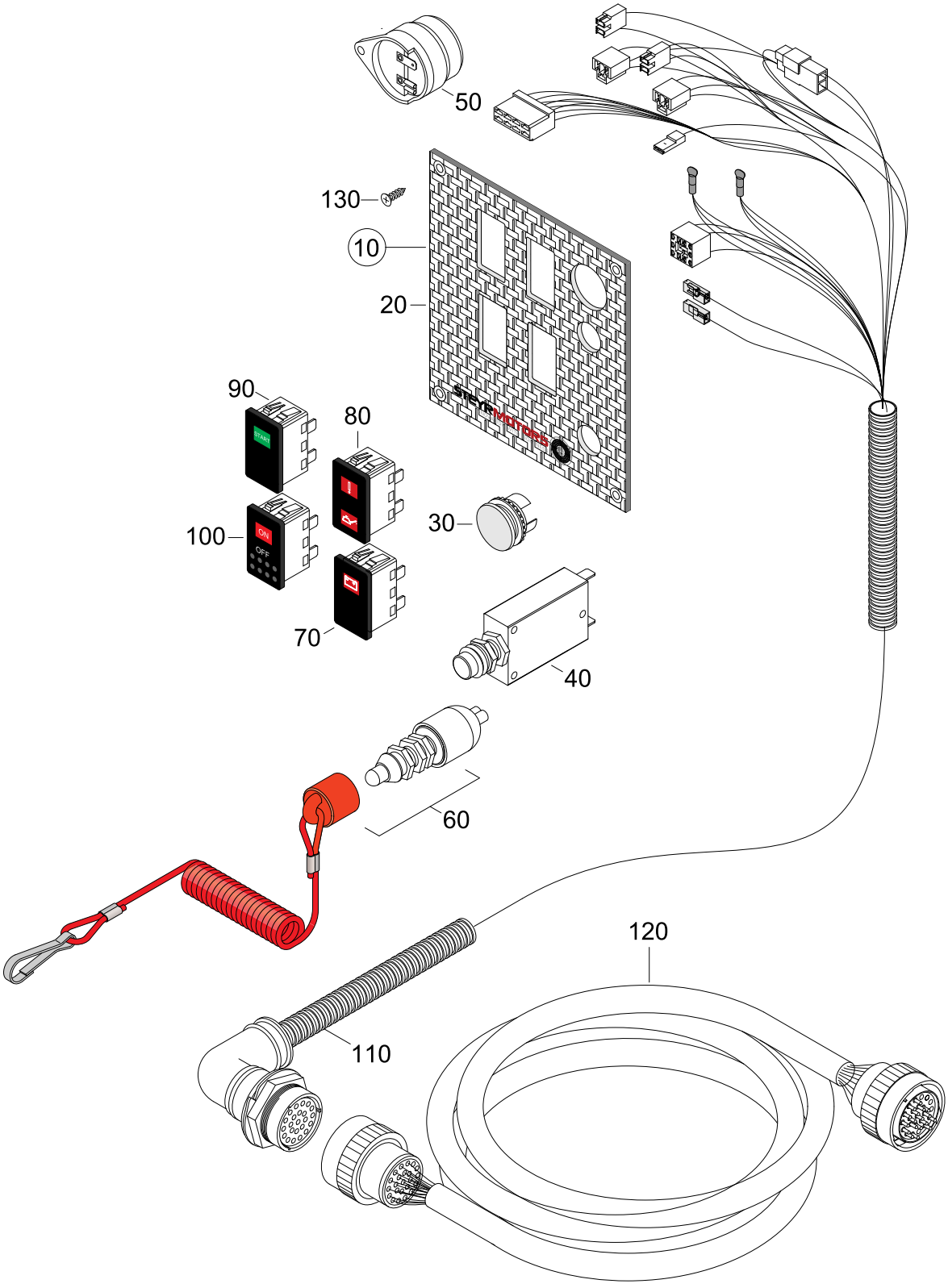

PUSH BUTTON PANEL SOLAS FOR DISPLAY FROM 2010-->

144 MARINE
TURBO DIESEL
+SOLAS

06122184-1

Pos.	Part.-No.	Qty	Designation	Step
10	2179967-0	1	PUSH BUTTON PANEL (LED) SOLAS (FOR SCC-DISPLAY)	.2
20	2179984-0	1	FRONT PLATE, PUSH BUTTON PANEL	..3
30	2179320-0	1	BLIND PLUG, BLACK	..3
40	Z002180-0	1	THERMO PROTECTION SWITCH ASSY.	..3
50	2178760-1	1	HORN AUDIBLE WARNING	..3
60	2179978-0	1	EMERGENCY CUTOFF SWITCH	..3
70	Z002197-0	1	WARNING LED, BATTERY CHARGE	..3
80	Z002196-0	1	WARNING LED, CHECK ENGINE & OIL PRESSURE	..3
90	Z002198-0	1	START SWITCH, GREEN	..3
100	Z002199-0	1	IGNITION SWITCH	..3
110	2180077-0	1	CABLE ASSY.PUSH-BUTTON PANEL	..3
120	2206291-1	1	INTERMEDIATE CABLE 5m	..3
130	9000817-0	4	CR.REC.COUNT.SUNK HD.TPG.SCR. 3.5x16	..3

144 MARINE TURBO DIESEL +SOLAS

EXTENSION CABLE INSTRUMENTS (ACCESSORY)

06136184-0

NOTE: NOT COMPATIBLE WITH "SOLAS" INSTRUMENT PANEL

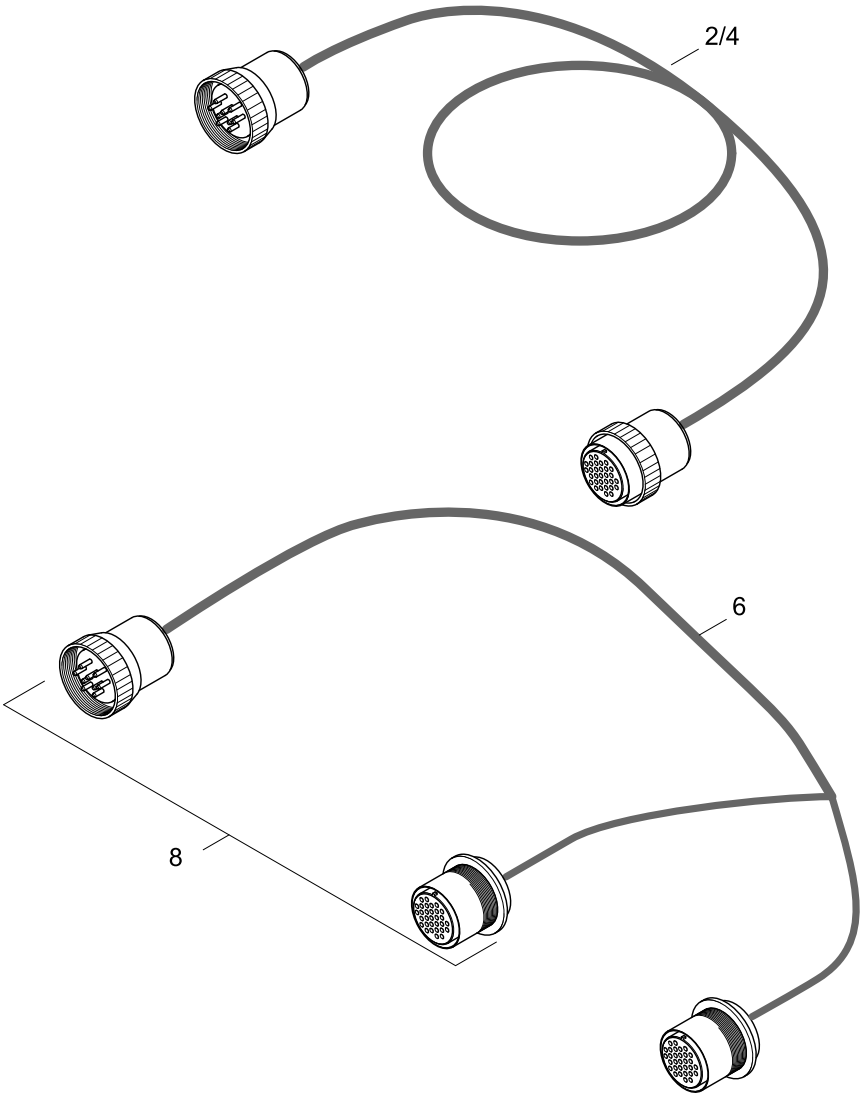

EXTENSION CABLE INSTRUMENTS (ACCESSORY)

144 MARINE
TURBO DIESEL
+SOLAS

06136184-0

Pos.	Part.-No.	Qty	Designation	Step
2	2206291-0	1	EXTENSION CABLE 6,3m 23-WAY CON.	.2
4	2206291-2	1	EXTENSION CABLE 10m 23 WAY CON.	.2
6	2206292-0	1	Y-JUNCTION CABLE 1m 23-WAY CON.	.2
8	Z002410-0	1	CABLE-PLUG PAIR COMPL. 23-POLE	.2

NOTE: **NOT COMPATIBLE WITH "SOLAS" INSTRUMENT PANEL**

TRANSMISS., MOUNTING BRACKETS, PIPES

07004084-0

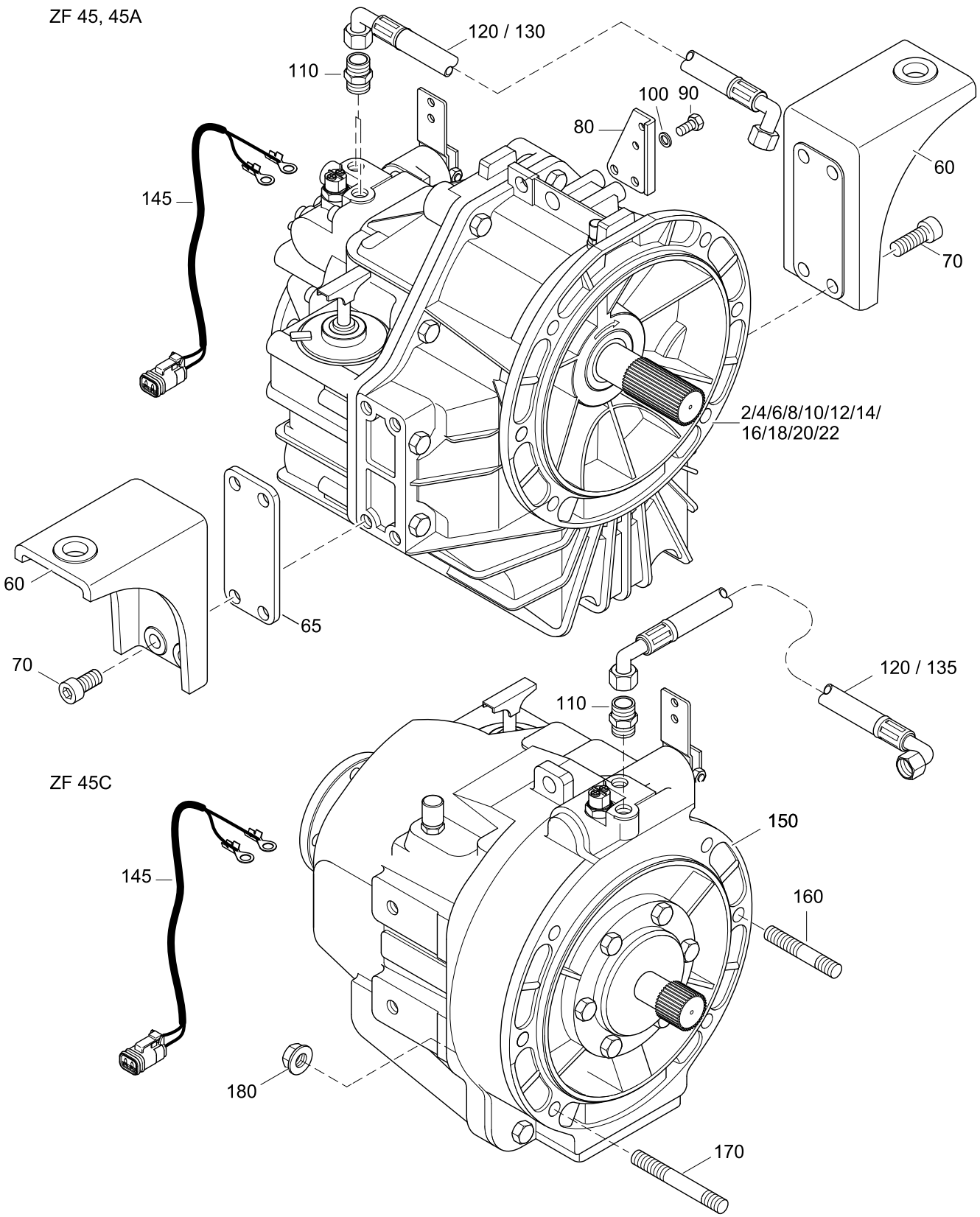

TRANSMISS., MOUNTING BRACKETS, PIPES

144 MARINE
TURBO DIESEL
+SOLAS

07004084-0

Pos.	Part.-No.	Qty	Designation	Step
2	2178931-5	1	GEARBOX ASSY. ZF 45 A I=2.03 (PAINTED)	.2
4	2178931-6	1	GEARBOX ASSY. ZF 45 A I=1.51 (PAINTED)	.2
6	2178931-7	1	GEARBOX ASSY. ZF 45 A I=1.26 (PAINTED)	.2
8	2178931-8	1	GEARBOX ASSY. ZF 45 A I=2.43 (PAINTED)	.2
10	2178931-F	1	GEARBOX ASSY. ZF 45 A I=2.03 (PAINTED) WITH TROLLING VALVE	.2
12	2178931-G	1	GEARBOX ASSY. ZF 45 A I=1.51 (PAINTED) WITH TROLLING VALVE	.2
14	2178931-J	1	GEARBOX ASSY. ZF 45 A I=1.26 (PAINTED) WITH TROLLING VALVE	.2
16	2178931-I	1	GEARBOX ASSY. ZF 45 A I=2.43 (PAINTED) WITH TROLLING VALVE	.2
18	2178964-5	1	GEARBOX ASSY. ZF 45 I=2.51 (PAINTED)	.2
20	2178964-6	1	GEARBOX ASSY. ZF 45 I=3.74 (PAINTED)	.2
22	2178964-7	1	GEARBOX ASSY. ZF 45 I=3.03 (PAINTED)	.2
60	2178710-V	2	BRACKET GEAR-BOX DOWN ANGLE	.2
65	2203761-0	4	SPACER BRACKET GEAR BOX	.2
70	9000334-0	8	HEX.SOCK.HD.CAP SCR. DIN 912-M12x55-8.8-A3C	.2
80	2178711-9	1	BRACKET SHIFT CABLE PAINTED	.2
90	3800224-0	2	HEX.HD.SCR. ISO 4017-M8x20-A2-70	.2
100	3930103-0	2	WASHER DIN 125-8.4-140HV-A2	.2
110	Z011655-0	2	THREADED SOCKET 3/8NPT-M18x1,5	.2
120	2178731-0	1	OIL HOSE L=690mm	.2
130	2178732-0	1	OIL HOSE L=825mm	.2
135	2178732-1	1	OIL HOSE L=505mm C-GEAR BOX	.2
145	2178745-1	1	HARNESS GEAR-SWITCH	.2
150	2178931-9	1	GEARBOX ASSY. ZF 45 C I=1 (PAINTED)	.2
160	9000704-0	2	STUD DIN 835-M10x90-8.8-A3C	.2
170	9000705-0	4	STUD DIN 835-M10x130-8.8-A3C	.2
180	9000042-1	6	HEX.FLANGE NUT DIN 6923-M10-8-A3C	.2

STEYRMOTORS
INNOVATION WITH LIGHTNESS

144 MARINE
TURBO DIESEL
+SOLAS

TRANSMISSION-SHAFT, PTO-SHAFT (STEEL)

07016084-0

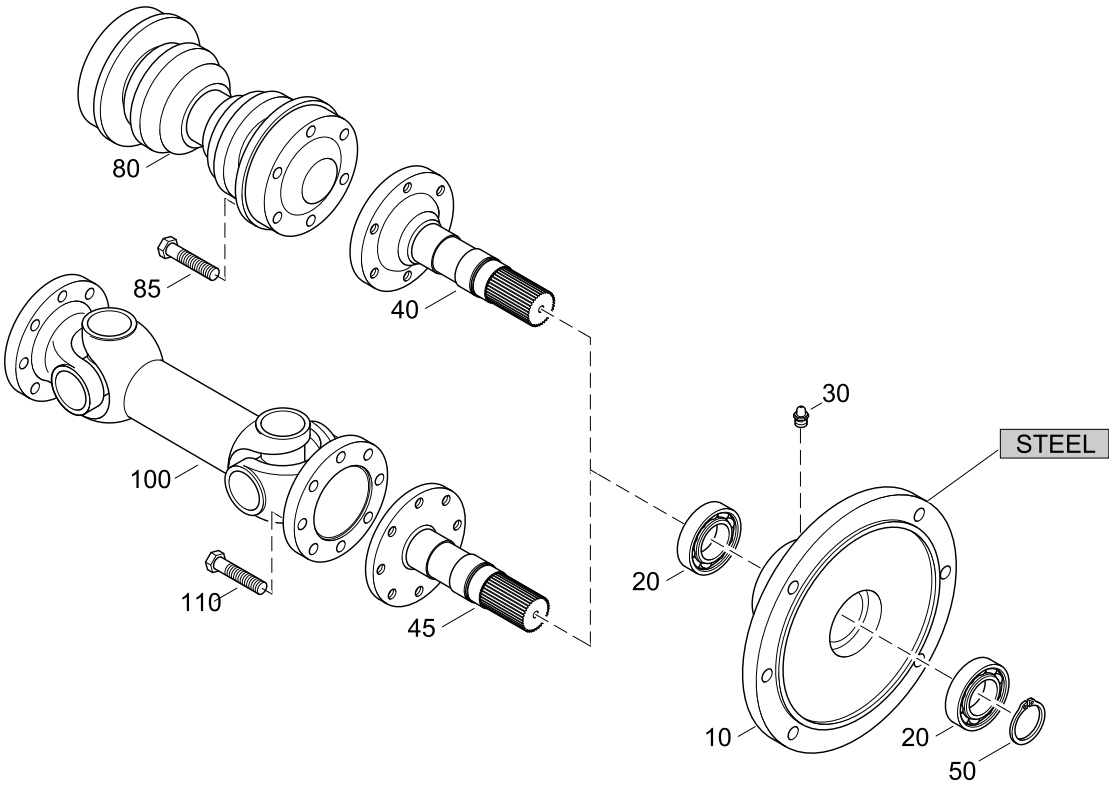

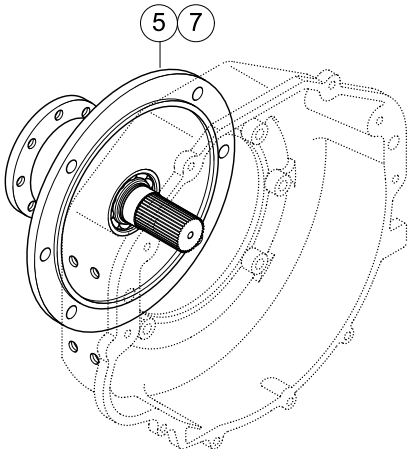

STEEL HOUSING

TRANSMISSION-SHAFT, PTO-SHAFT (STEEL)

144 MARINE
TURBO DIESEL
+SOLAS

07016084-0

Pos.	Part.-No.	Qty	Designation	Step
5	2178812-1	1	AD. SHAFT ASSY PROPU.(6 HOLES) PAINTED	.2
7	2178812-2	1	AD. SHAFT ASSY PROP. (8 HOLES) PAINTED	.2
10	2178815-0	1	ADAPTER HSG ENGINE-PROPULSION (STEEL)	..3
20	3311181-0	2	DEEP GROOVE BALL BEARING DIN 625-RS1	..3
30	3963112-0	1	LUBRICATING NIPPLE, CONE DIN 71412-AM8x1-A3F	..3
40	2178814-0	1	ADAPTER SHAFT ENGINE-PROPULSIO N (6-HOLES)	..3
45	2178814-1	1	ADAPTER SHAFT ENGINE-PROPULSIO N (8-HOLES)	..3
50	3933251-0	1	RETAINING RING SHAFT DIN 471-35x1,5	..3
80	2178836-1	1	PROPELLER SHAFT SHORT L=210 +/-24mm	.2
85	9000198-0	6	HEX.HD.BOLT ISO 4014-M12x65-8.8-A3C	.2
100	2178836-0	1	SLIDING SHAFT LONG L=354mm +70	.2
110	3802515-0	8	HEX.HD.SCR. ISO 4017-M10x20-8.8-A3C	.2

07016184-0

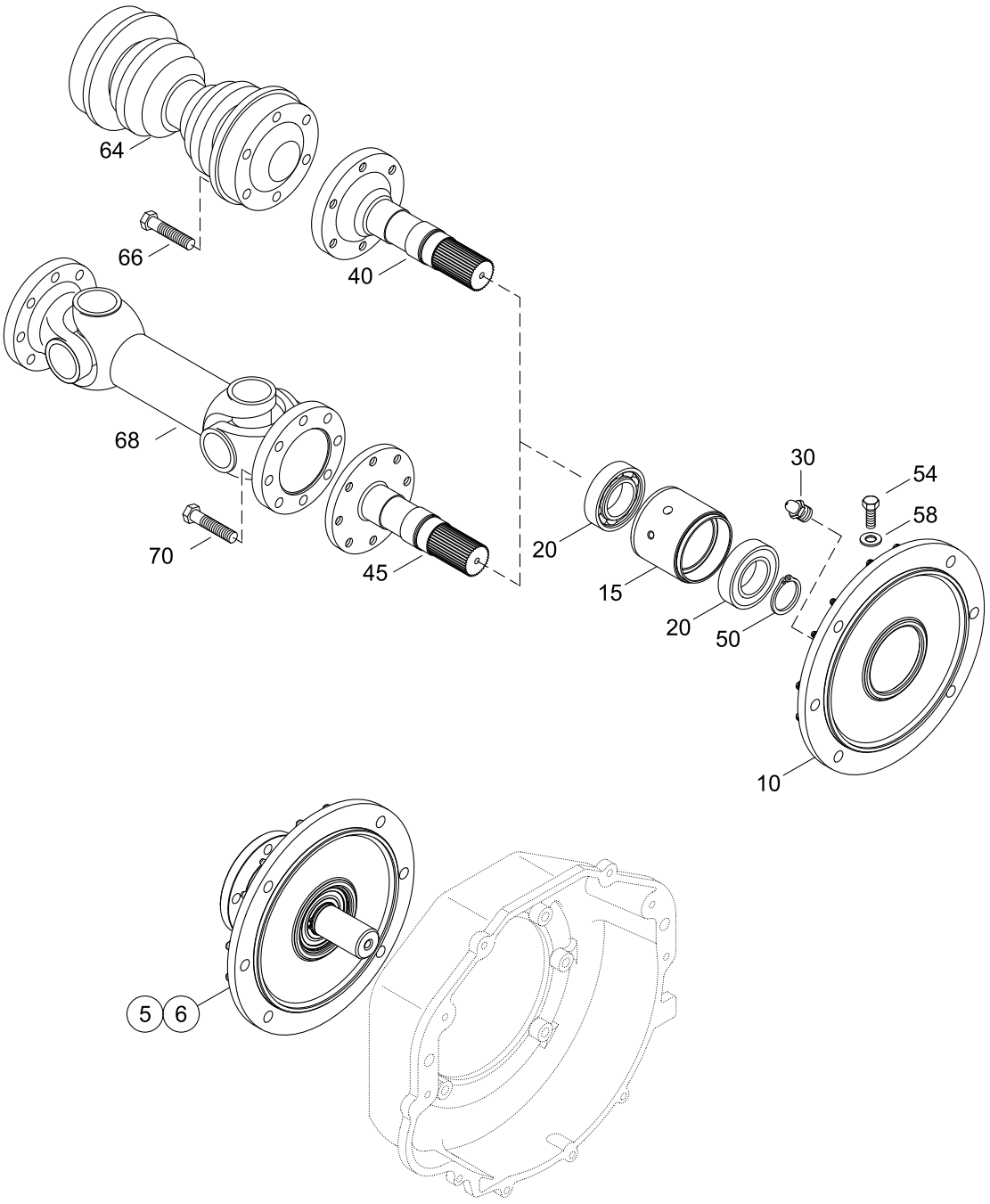

ALU - HOUSING

TRANSMISSION-SHAFT, PTO-SHAFT (ALU)

144 MARINE
TURBO DIESEL
+SOLAS

07016184-0

Pos.	Part.-No.	Qty	Designation	Step
5	Z002098-0	1	ADAPTER SHAFT ASSY. - 6-HOLES (PAINTED)	.2
6	Z002099-0	1	ADAPTER SHAFT ASSY. - 8-HOLES (PAINTED)	.2
10	2178815-1	1	ADAPTER HOUSING JET (ALU CASTING)	..3
15	2179328-0	1	BEARING RETAINER	..3
20	3311181-0	2	DEEP GROOVE BALL BEARING DIN 625-RS1	..3
30	3963112-0	1	LUBRICATING NIPPLE, CONE DIN 71412-AM8x1-A3F	..3
40	2178814-0	1	ADAPTER SHAFT ENGINE-PROPULSIO N (6-HOLES)	..3
45	2178814-1	1	ADAPTER SHAFT ENGINE-PROPULSIO N (8-HOLES)	..3
50	3933251-0	1	RETAINING RING SHAFT DIN 471-35x1,5	..3
54	3802442-0	2	HEX.HD.SCR. ISO 4017-M8x40-8.8-A2C	..3
58	O125134-0	2	WASHER LARGE	..3
64	2178836-1	1	PROPELLER SHAFT SHORT L=210 +/-24mm	.2
66	9000198-0	6	HEX.HD.BOLT ISO 4014-M12x65-8.8-A3C	.2
68	2178836-0	1	SLIDING SHAFT LONG L=354mm +70	.2
70	3802515-0	8	HEX.HD.SCR. ISO 4017-M10x20-8.8-A3C	.2

TRANSMISSION GEAR SHIFT, CONTROLS

07054084-0

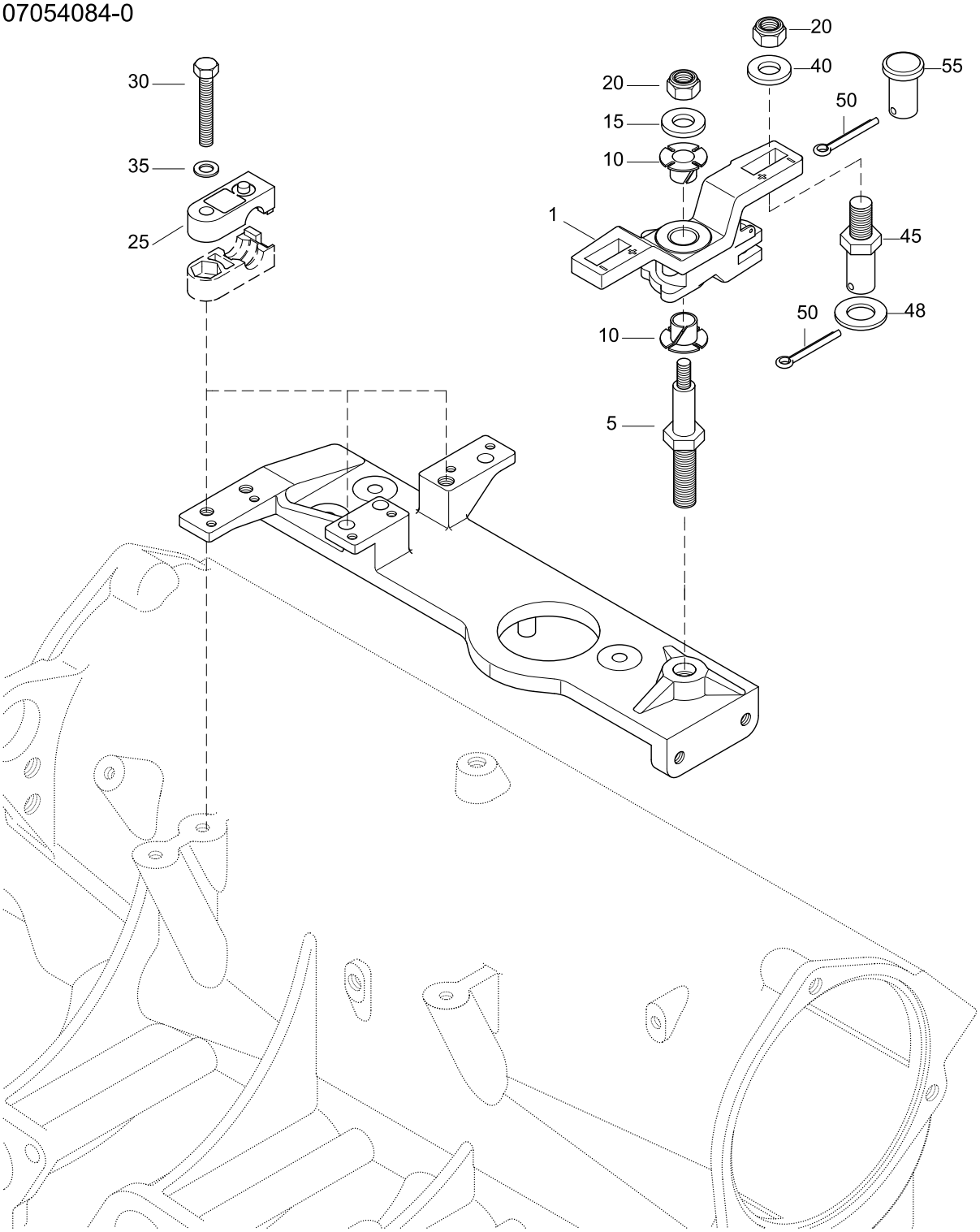

TRANSMISSION GEAR SHIFT, CONTROLS

144 MARINE
TURBO DIESEL
+SOLAS

07054084-0

Pos.	Part.-No.	Qty	Designation	Step
1	O915911-0	1	CONTROL LEVER	.2
5	O914626-0	1	STUD CONTROL LEVER	.2
10	O311015-0	2	BUSHING	.2
15	O328738-0	1	PLAIN WASHER 1/4	.2
20	O121731-0	2	NUT, LOCK 1/4-28 SST	.2
25	O913795-0	4	CLAMP BOWDEN WIRE	.2
30	3800222-0	2	HEX.HD.SCR. ISO 4017-M6x35-A2-70	.2
35	3930070-0	2	WASHER DIN 125-6-140HV-A2	.2
40	O328703-0	1	PLAIN WASHER 1/4x5/8 SST	.2
45	O914727-0	1	STUD BOLT	.2
48	O304051-0	1	WASHER, SHIFT CABLE	.2
50	O305650-0	2	COTTER PIN	.2
55	O913791-0	1	BOLT	.2

144 MARINE TURBO DIESEL +SOLAS

DRIVE ADAPTOR VOLVO STERNDRIVE (ACCESSORY)

07206084-0

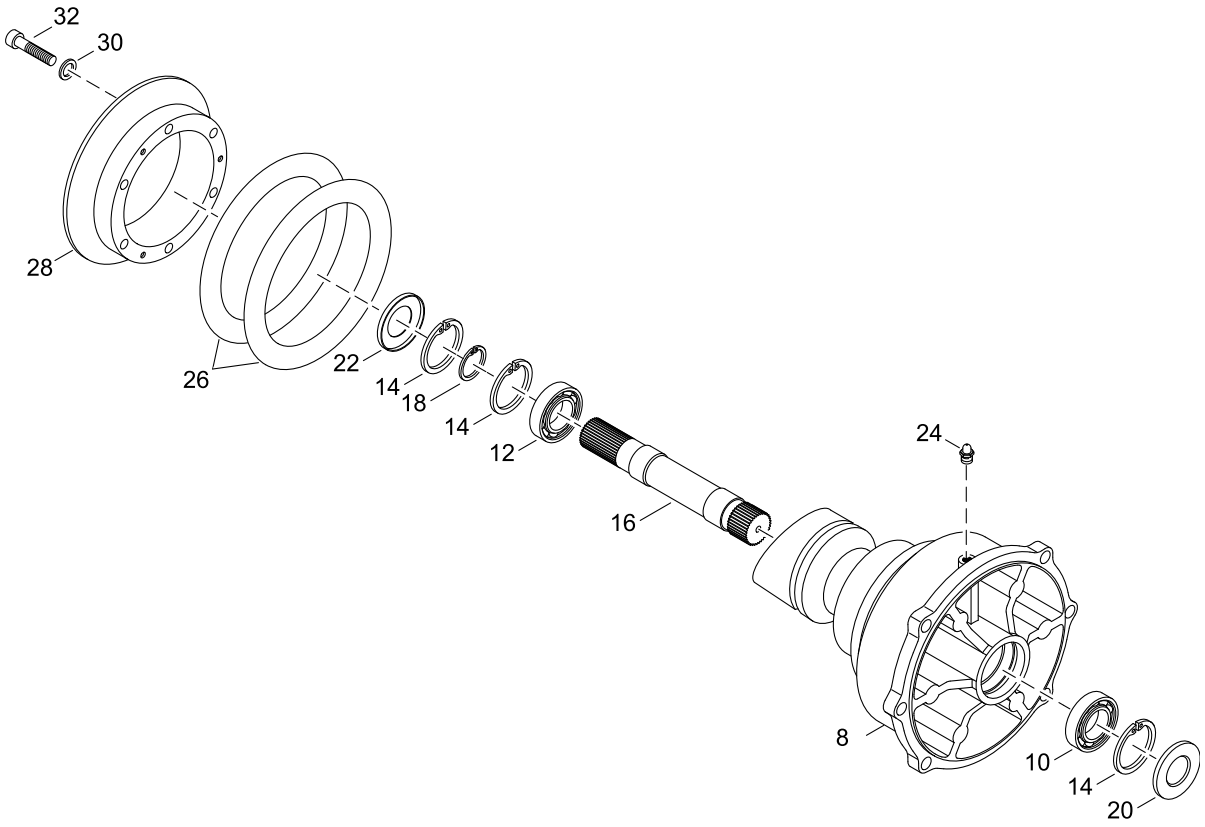

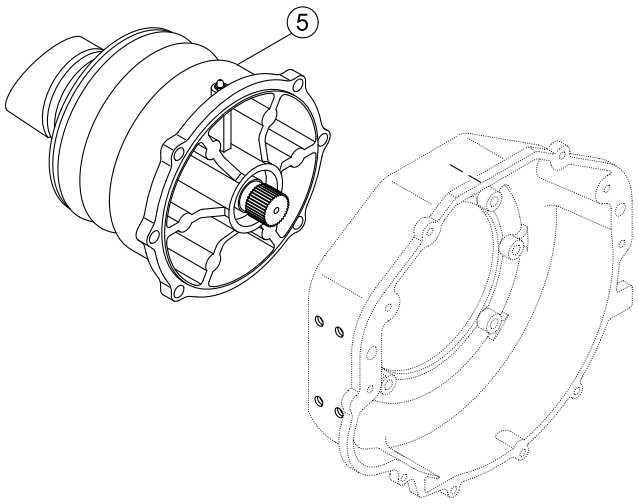

DRIVE ADAPTOR VOLVO STERNDRIVE (ACCESSORY)

144 MARINE
TURBO DIESEL
+SOLAS

07206084-0

Pos.	Part.-No.	Qty	Designation	Step
5	2178819-0	1	ADAPTER VOLVO STERN DRIVE (PAINTED)	.2
8	2178817-0	1	ADAPTERHSG. VOLVO STERN DRIVE	..3
10	9000152-0	1	DEEP GROOVE BALL BEARING DIN 625-6007	..3
12	3311018-0	1	DEEP GROOVE BALL BEARING DIN 625-6206 RS1	..3
14	3934310-0	3	INTERIOR CIRCLIP DIN 472-62x2	..3
16	2178818-0	1	ADAPTER SHAFT VOLVO STERN DRIV E	..3
18	3933200-0	1	EXTERIOR CIRCLIP DIN 471-30x1.5	..3
20	9000153-0	1	RADIAL SEALING RING DIN 3760-35x62x7-AS	..3
22	9000153-1	1	RADIAL SEALING RING DIN 3760-35x62x7-A	..3
24	3963124-0	1	LUBRICATING NIPPLE, CONE DIN 71412-AM10x1-A3F	..3
26	2178821-0	2	O-RING 155 X 22	..3
28	2178820-0	1	FLANGE VOLVO STERN-DRIVE	..3
30	3930075-0	6	WASHER DIN 125 A10.5-140HV-A2	..3
32	9000185-1	6	HEX.SOCK. HD.CAP SCR. DIN 912-M10x100-A2-70	..3

STEYRMOTORS
INNOVATION WITH LIGHTNESS

144 MARINE
TURBO DIESEL
+SOLAS

DRIVE SHAFT EXT. MERCURY STERNDRIVE (ACCESSORY)

07306184-0

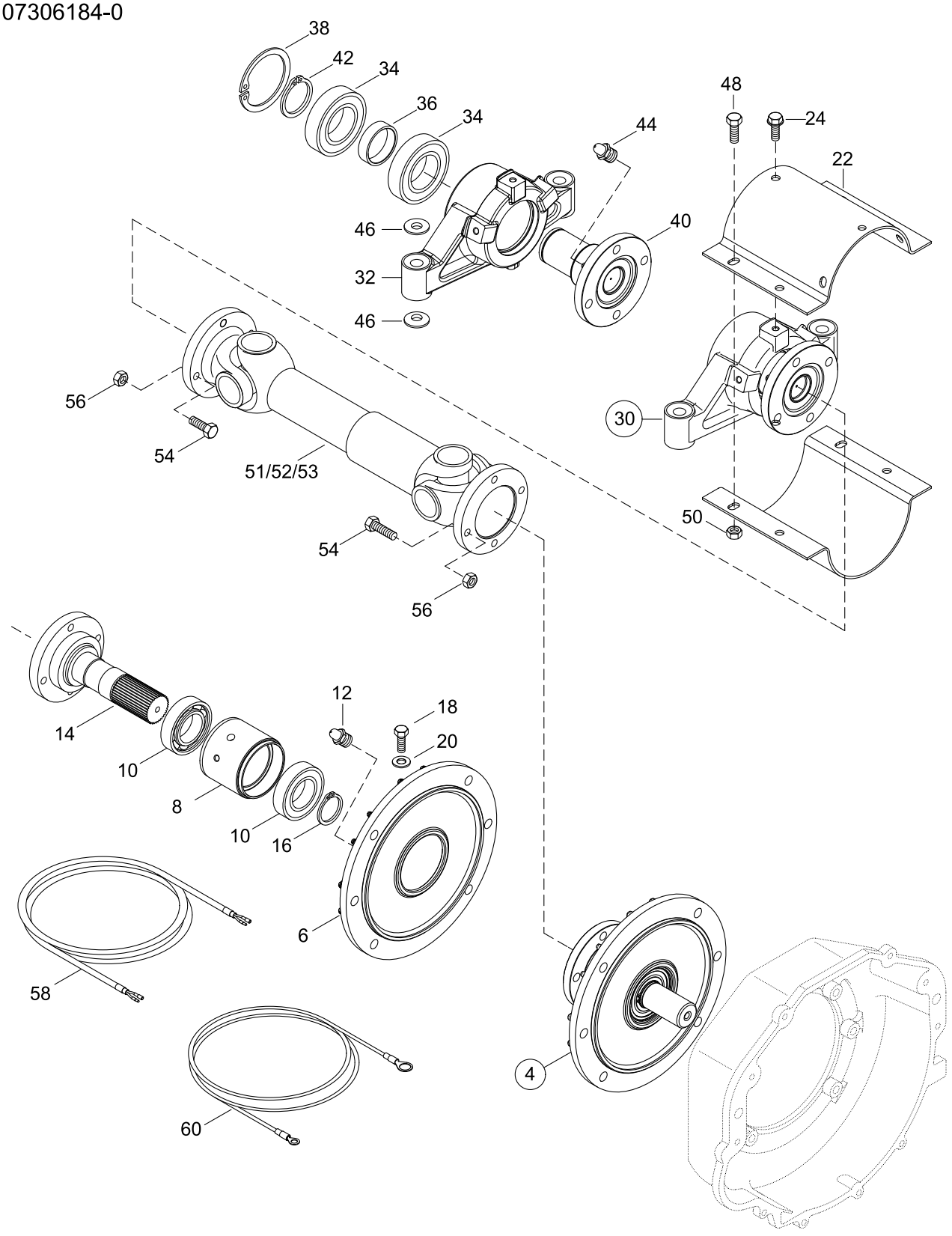

DRIVE SHAFT EXT. MERCURY STERNDRIVE (ACCESSORY)

144 MARINE
TURBO DIESEL
+SOLAS

07306184-0

Pos.	Part.-No.	Qty	Designation	Step
4	Z002116-0	1	ADAPTER SHAFT ASSY. - MERCURY W.LENGTH BALANCE (PAINTED)	.2
6	Z002117-0	1	ADAPTER HOUSING - PAINTED (ALU CASTING)	..3
8	2179328-0	1	BEARING RETAINER	..3
10	3311181-0	2	DEEP GROOVE BALL BEARING DIN 625-RS1	..3
12	3963112-0	1	LUBRICATING NIPPLE, CONE DIN 71412-AM8x1-A3F	..3
14	2178814-2	1	ADAPTER SHAFT (MERCURY)	..3
16	3933251-0	1	RETAINING RING SHAFT DIN 471-35x1,5	..3
18	3802442-0	2	HEX.HD.SCR. ISO 4017-M8x40-8.8-A2C	..3
20	O125134-0	2	WASHER LARGE	..3
22	2179273-0	4	COVER PLATE	.2
24	9000305-0	6	HEX.FLANGE BOLT EN 1665-M8x20-10.9-DAC	.2
30	Z002118-0	1	BEARING BLOCK DRIVE SH. MERC. ASSY. (PAINTED)	.2
32	Z002119-0	1	BEARING BLOCK DRIVE SH. MERC. (PAINTED)	..3
34	9000486-0	2	DEEP GROOVE BALL BEARING DIN 625-6209 2RS1	..3
36	2179271-0	1	DISTANCE PLATE	..3
38	9000403-0	1	RETAINING RING BORE DIN 472-85x3	..3
40	Z002120-0	1	SHAFT-FLANGE DRIVE SHAFT MERC.	..3
42	3933350-0	1	RETAINING RING SHAFT DIN 471-45x1.75-BLANK	..3
44	3963112-0	1	LUBRICATING NIPPLE, CONE DIN 71412-AM8x1-A3F	..3
46	2179274-0	4	WASHER SPHERIC	.2
48	3802515-0	8	HEX.HD.SCR. ISO 4017-M10x20-8.8-A3C	.2
50	9000052-0	8	HEX.FLANGE NUT,PREVG.TOR. DIN 6927-M10-8-DAC A500	.2
51	Z002079-0	1	DRIVE SHAFT L=432mm & SCREWS	.2
52	Z002080-0	1	DRIVE SHAFT L=1000mm & SCREWS	.2
53	Z002081-0	1	DRIVE SHAFT L=1500mm & SCREWS	.2
54	9000066-0	8	HEX.HD.BOLT ISO 4017-M10x35-12.9	..3
56	9000052-0	8	HEX.FLANGE NUT,PREVG.TOR. DIN 6927-M10-8-DAC A500	..3
58	2179352-0	1	EXTENSION CABLE - TRIMSENSOR 1,5m	.2
60	2179353-0	1	GROUND WIRE FLYW.HSG-TRANSOM 1,8m	.2

STEYRMOTORS
INNOVATION WITH LIGHTNESS

144 MARINE
TURBO DIESEL
+SOLAS

HYDRAULIC PUMP

14084084-0

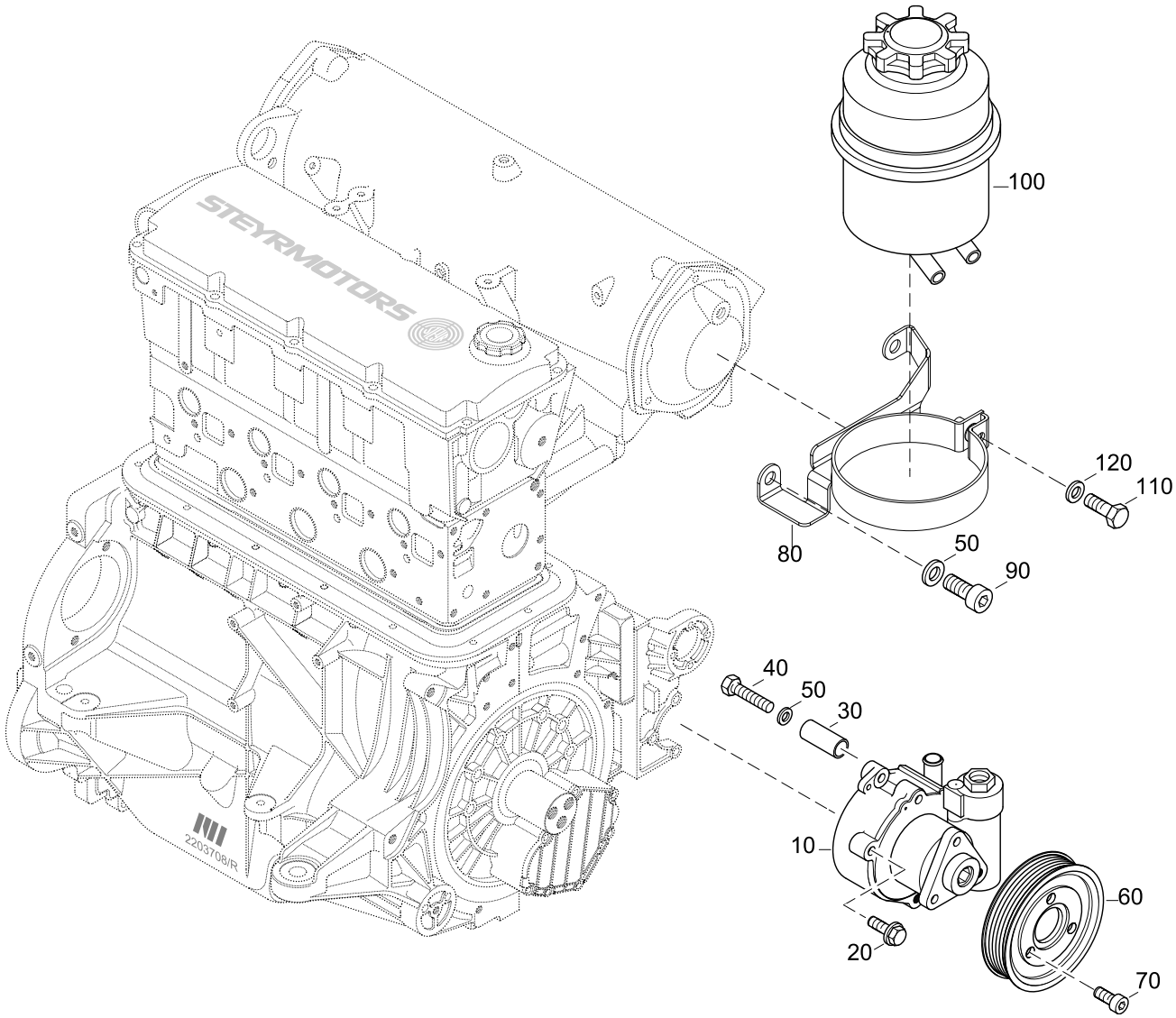

HYDRAULIC PUMP

144 MARINE
TURBO DIESEL
+SOLAS

14084084-0

Pos.	Part.-No.	Qty	Designation	Step
10	2203712-9	1	POWER STEERING PUMP (PAINTED)	.2
20	9000278-0	3	HEX.FLANGE BOLT EN 1665-M8x35-8.8-A2C	.2
30	2203750-0	1	CLAMPING SLEEVE PWR.STRG.PUMP	.2
40	3802442-0	1	HEX.HD.SCR. ISO 4017-M8x40-8.8-A2C	.2
50	3930103-0	3	WASHER DIN 125-8.4-140HV-A2	.2
60	2203743-0	1	PULLEY PWR.STRG.PUMP POLY-V	.2
70	3860152-0	3	HEX.SOCK. HD.CAP SCR. DIN 912-M8x16-A2-70	.2
80	2203759-0	1	FASTENI. OILTANK PWR.STRG.PUMP 4 CYL. MARINE	.2
90	3862462-0	2	HEX.SOCK. HD.CAP SCR. DIN 912-M8x60-8.8-A2C	.2
100	2178869-1	1	OILTANK POWER STEERING PUMP	.2
110	3800223-0	1	HEX.HD.SCR. ISO 4017-M6x60-A2-70	.2
120	3930070-0	1	WASHER DIN 125-6-140HV-A2	.2
130	Z002067-1	1	POWER STEERING PUMP & LINES KIT 4 CYL.	.2

HYDRAULIC PIPES

14094084-0

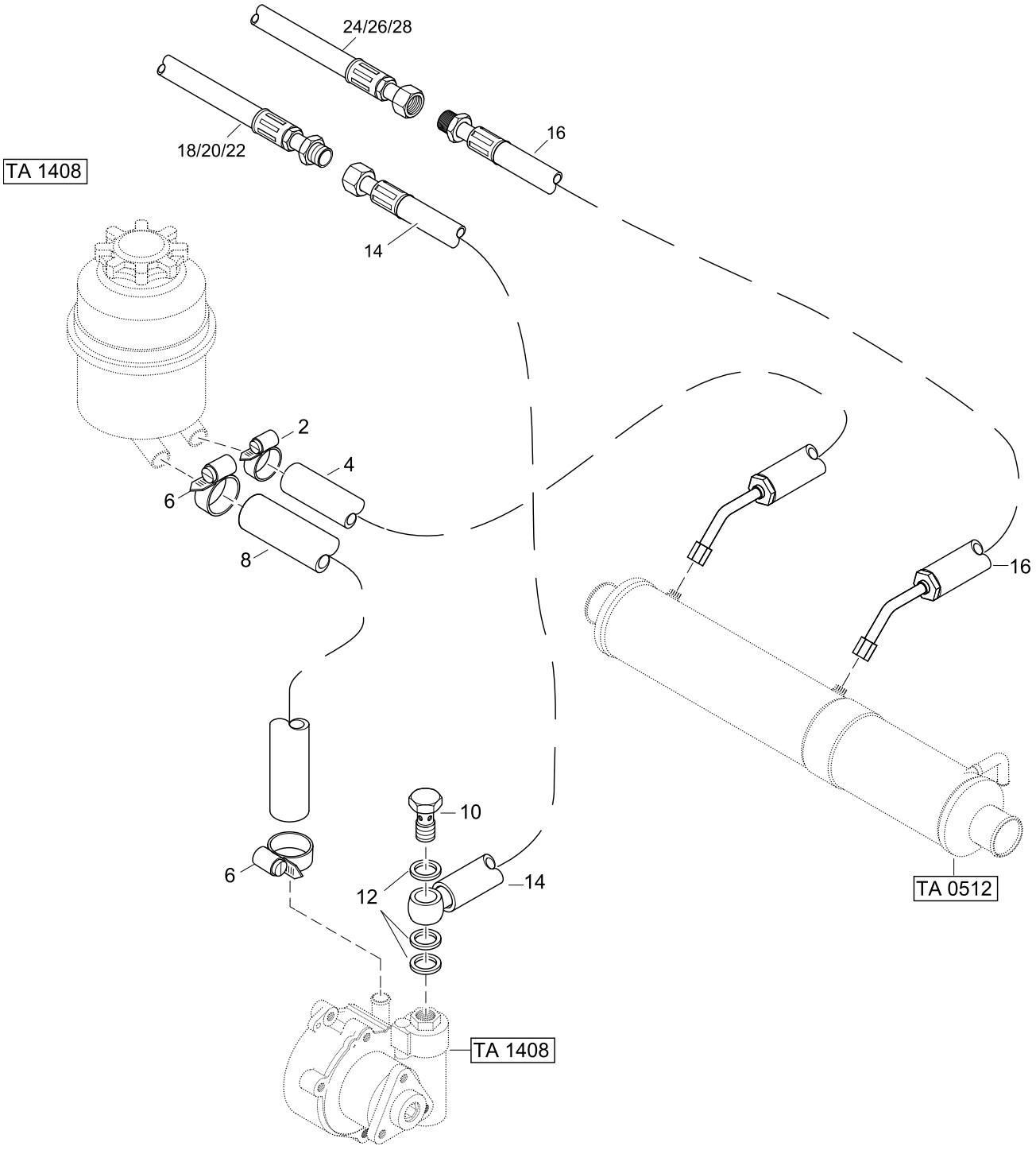

HYDRAULIC PIPES

144 MARINE
TURBO DIESEL
+SOLAS

14094084-0

Pos.	Part.-No.	Qty	Designation	Step
2	2178655-0	1	HOSE CLAMP 12-20/9	.2
4	2178936-1	1	HOSE, OIL COOLER-OILTANK	.2
6	2177753-0	2	HOSE CLAMP 16-25/9 EN 10088-1	.2
8	2178573-0	1	HOSE, RESERVOIR HYDR. PUMP	.2
10	2180201-0	1	HOLLOW SCREW M16x1,5 RW	.2
12	3098016-0	3	SEALING RING DIN 7603-A16x20-CU	.2
14	2178905-0	1	HOSE, PUMP-CYLINDER	.2
16	2178906-0	1	HOSE, CYLINDER-OIL COOLER	.2
18	2178905-M	1	HOSE, ADAPTER PUMP-CYL. BRAVO STERN DRIVE (SCREWED)	.2
20	2178905-S	1	HOSE W.QUICK COUPLER PUMP —> CYL. BRAVO STERN DR.	.2
22	2178905-A	1	HOSE PUMP-CYL. ALPHA & K.COBRA STERN DRIVE	.2
24	2178906-M	1	HOSE ZYL. BRAVO STERN DRIVE - OIL COOLER (SCREWED)	.2
26	2178906-S	1	HOSE W. QUICK COUPLER ZYL. BRAVO STERNDR.—>OIL COOLER	.2
28	2178906-A	1	HOSE CYL. ALPHA & K.COBRA ST.DRIVE - COOLER	.2

ENGINE PREHEATING (ACCESSORY)

22076184-0

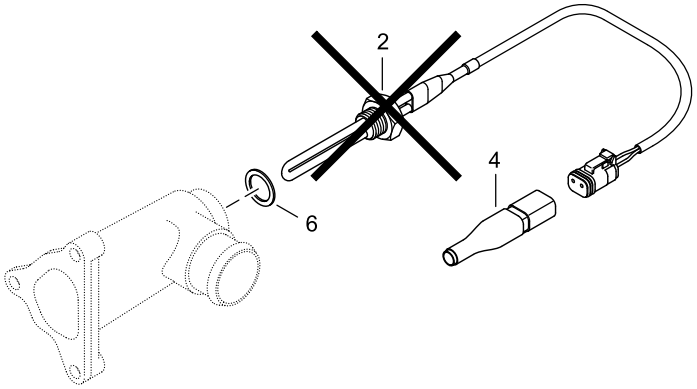

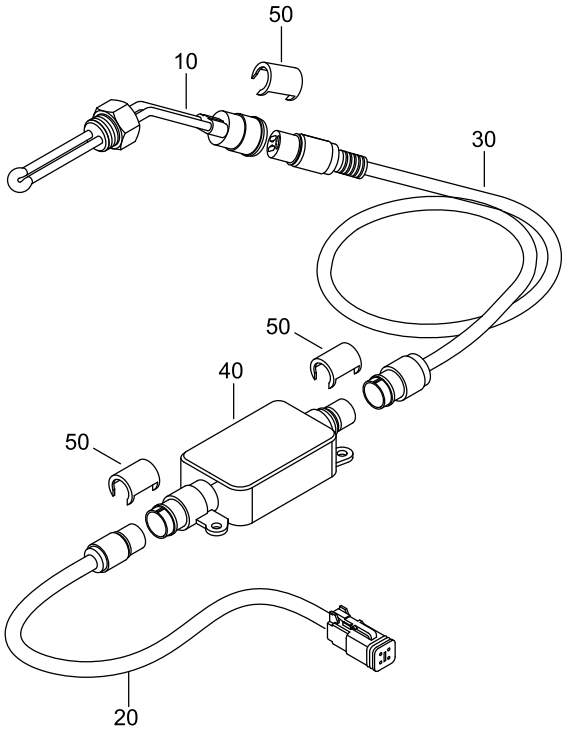

ENGINE PREHEATING (ACCESSORY)

144 MARINE
TURBO DIESEL
+SOLAS

22076184-0

Pos.	Part.-No.	Qty	Designation	Step
2	Z002202-0	1	KIT BLOCK HEATING DEVICE 42V - 300W (RETROFITTING KIT)	.2
4	2178982-5	1	THERMO SWITCH, PREHEATING DEVICE	.2
6	3098026-0	1	SEALING RING DIN 7603-A22x27-CU	.2
10	2180393-0	1	BLOCK HEATING DEVICE 42V - 300W	.2
20	2180396-0	1	CABLE ENGINE PREHEATING DEVICE 0,5m	.2
30	2206318-0	1	CABLE ENGINE PREHEATING DEVICE, 2m	.2
40	2180395-0	1	THERMO SWITCH	.2
50	2180695-0	3	SAFETY LOCK	.2

144 MARINE
TURBO DIESEL
+SOLAS

INTEGR. FLYWHEELGENERATOR (IFG) (ACCESSORY)

40004084-0

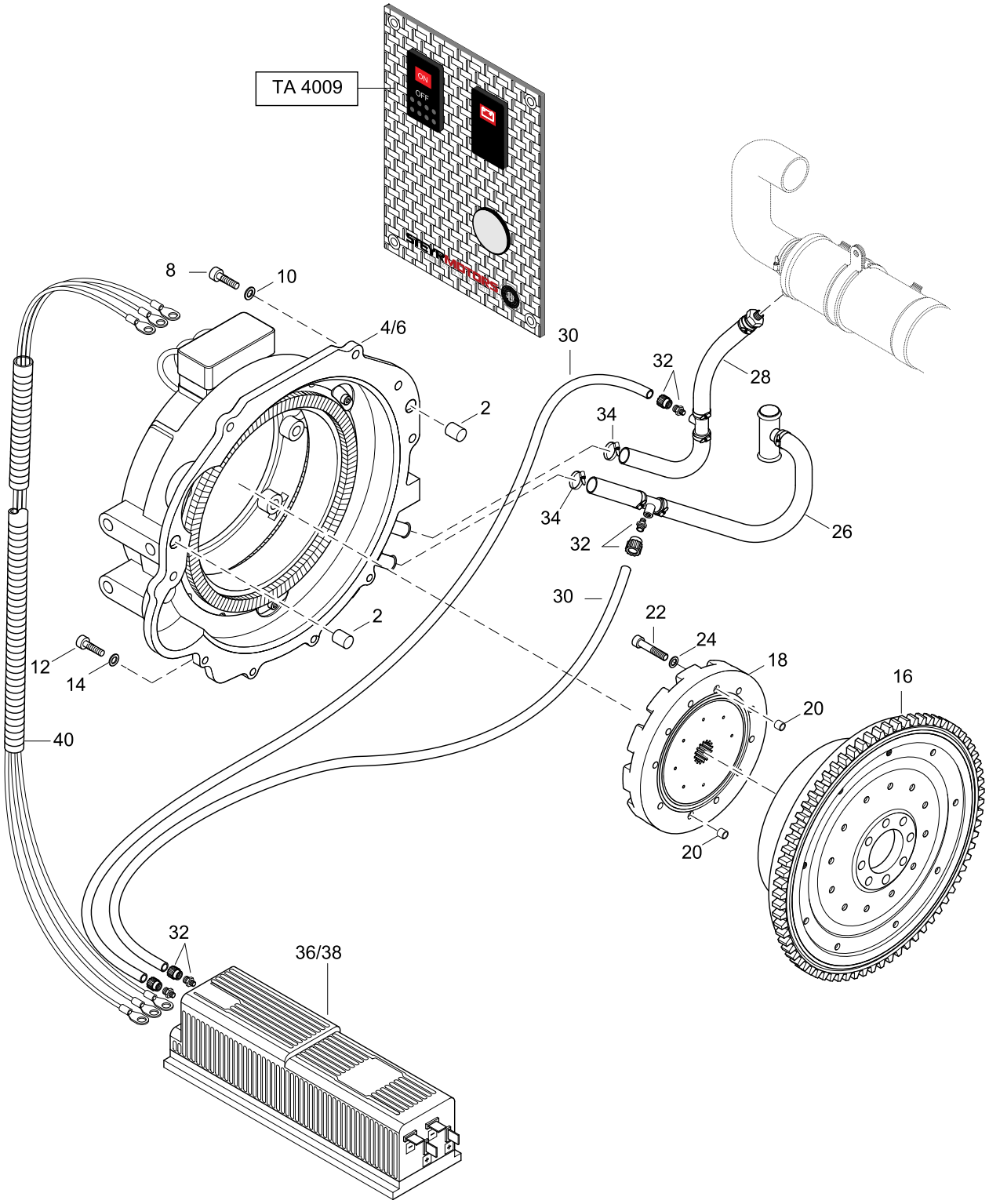

INTEGR. FLYWHEELGENERATOR (IFG) (ACCESSORY)

144 MARINE
TURBO DIESEL
+SOLAS

40004084-0

Pos.	Part.-No.	Qty	Designation	Step
2	9000490-0	2	PARALLEL PIN 16m6x22-ST	.2
4	Z002104-0	1	S.P.FLYWHEEL HSG. IFG 24V ASSY (PAINTED)	.2
6	Z002105-0	1	S.P.FLYWHEEL HSG. IFG 12V ASSY (PAINTED)	.2
8	3862545-0	5	HEX.SOCK. HD.CAP SCR. DIN 912-M10x35-A2-70	.2
10	3930075-0	5	WASHER DIN 125 A10.5-140HV-A2	.2
12	3862433-0	4	HEX.SOCK. HD.CAP SCR. DIN 912-M8x30-A2-70	.2
14	3930103-0	4	WASHER DIN 125-8.4-140HV-A2	.2
16	Z002430-0	1	S.P.FLYWHEEL 4 CYL. „IFG“ ASSY (BALANCED)	.2
18	Z002106-0	1	S.P. COUPLER „IFG“	.2
20	2203543-0	2	FITTING SLEEVE DM11 (TO M8)	.2
22	9000473-0	12	HEX.SOCK. HD.CAP SCR. DIN 912-M8x100-12.9-DAC A500	.2
24	3930103-0	12	WASHER DIN 125-8.4-140HV-A2	.2
26	Z002107-0	1	COOLING WATER HOSE ASSY. „IFG“ (RETURN)	.2
28	Z002108-0	1	COOLING WATER HOSE ASSY. „IFG“ (SUPPLY)	.2
30	2179298-0	2	HOSE 8x1.25 L=2000mm	.2
32	2179297-0	4	FAST SCREW CONNECTION	.2
34	2178655-0	8	SCHLAUCHSCHELLE 12-20/9	.2
36	Z002110-0	1	ELECTR.CONTROL SYSTEM IFG 24V	.2
38	Z002111-0	1	ELECTR.CONTROL SYSTEM IFG 12V	.2
40	Z002112-0	1	KIT CONNECTING CABLE IFG	.2

144 MARINE
TURBO DIESEL
+SOLAS

PUSH BUTTON PANEL „IFG“
TILL -->2010

40096184-0

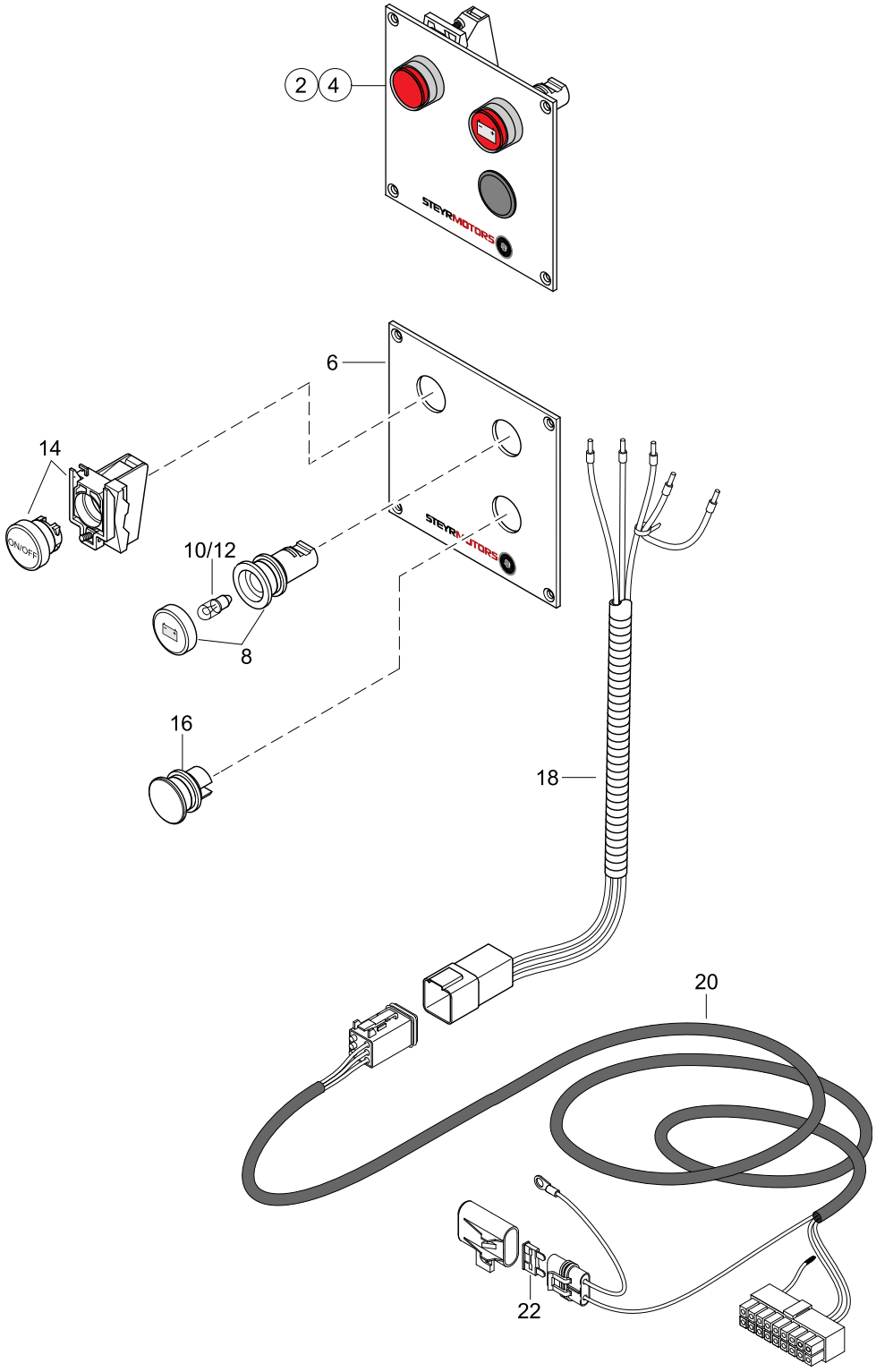

PUSH BUTTON PANEL „IFG“
TILL -->2010

144 MARINE
TURBO DIESEL
+SOLAS

40096184-0

Pos.	Part.-No.	Qty	Designation	Step
2	Z002114-0	1	PUSH BUTTON PANEL IFG 24V ASSY	.2
4	Z002113-0	1	PUSH BUTTON PANEL IFG 12V ASSY	.2
6	2179284-0	1	INSTRUMENT PANEL IFG	..3
8	Z002115-0	1	WARNING-LIGHT BATTERY CHARGE ASSY. 12V & 24V	..3
10	2179162-0	1	MINIATUR LAMP 12V/2W 10x28	..3
12	2179141-0	1	MINIATUR LAMP 24V/3W 10x28	..3
14	2179293-5	1	IGNITION SWITCH RED ASSY.	..3
16	2179320-0	1	BLIND PLUG, BLACK	..3
18	2206298-0	1	WIRING HARNESS ASSY. IFG-PANEL	..3
20	2206299-0	1	CONNE. CABLE AY. 8m IFG-PANEL	..3
22	11345	1	FUSE 10A, RED	..3

144 MARINE
TURBO DIESEL
+SOLAS

PUSH BUTTON PANEL „IFG“
FROM 2010-->

40096184-1

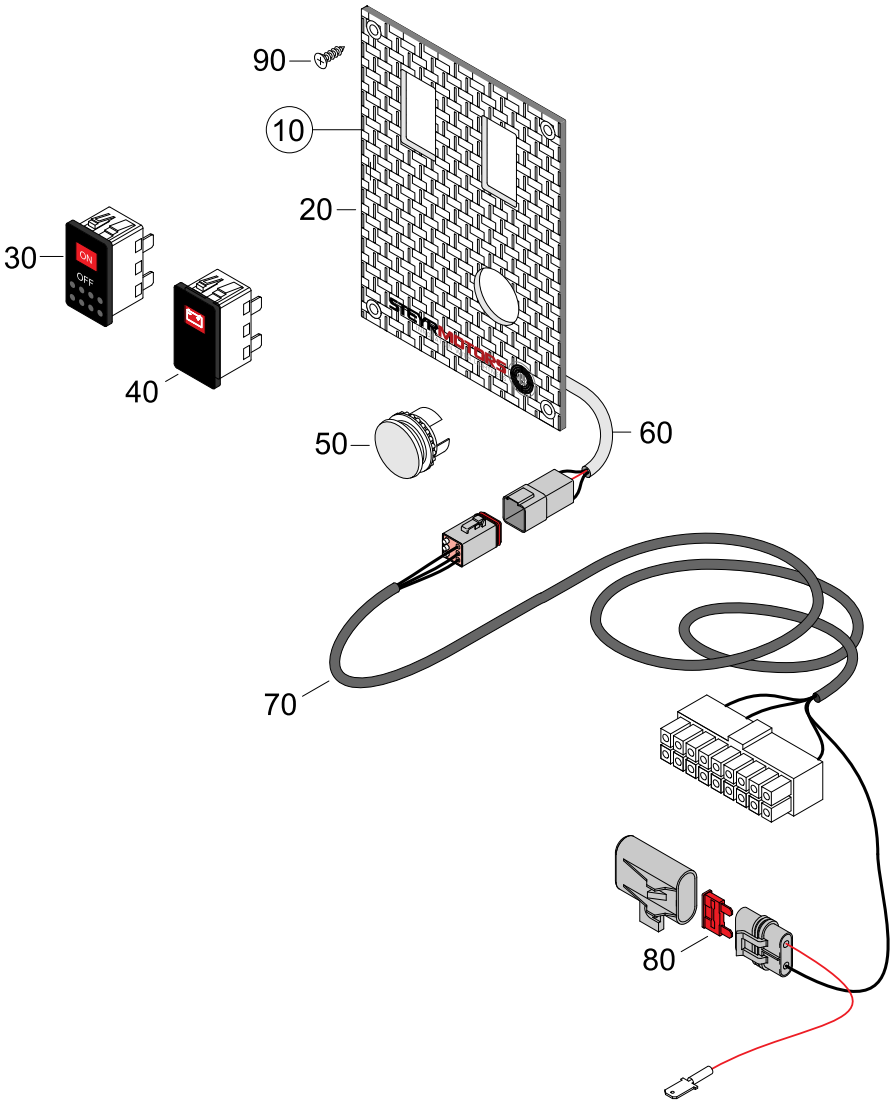

PUSH BUTTON PANEL „IFG“
FROM 2010-->

144 MARINE
TURBO DIESEL
+SOLAS

40096184-1

Pos.	Part.-No.	Qty	Designation	Step
10	2179968-0	1	PUSH BUTTON PANEL IFG (LED)	.2
20	2180092-0	1	INSTRUMENT PANEL IFG	..3
30	Z002199-0	1	IGNITION SWITCH	..3
40	Z002197-0	1	WARNING LED, BATTERY CHARGE	..3
50	2179320-0	1	BLIND PLUG, BLACK	..3
60	2206298-0	1	WIRING HARNESS ASSY. IFG-PANEL	..3
70	2206299-0	1	CONNE. CABLE AY. 8m IFG-PANEL	..3
80	11345	1	FUSE 10A, RED	..3
90	9000817-0	4	CR.REC.COUNT.SUNK HD.TPG.SCR. 3.5x16	..3

144 MARINE
TURBO DIESEL
+SOLAS

HYBRID

41006184-0

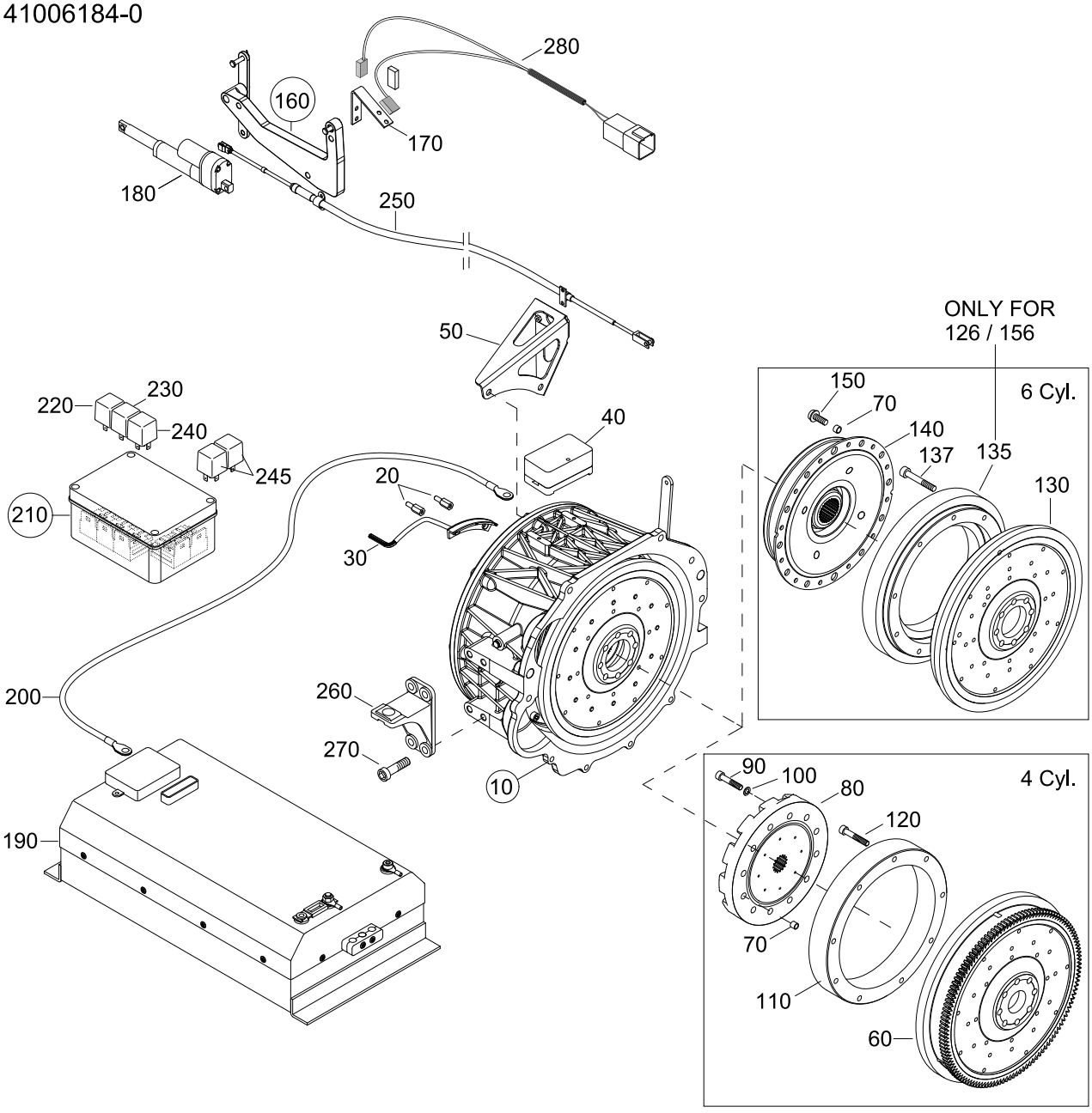

HYBRID

144 MARINE
TURBO DIESEL
+SOLAS

41006184-0

Pos.	Part.-No.	Qty	Designation	Step
10	Z002171-0	1	ELECTRIC MOTOR ASSY.	.2
20	2179623-1	2	DISTANCE BOLT	..3
30	Z002173-0	1	HALL SENSOR ASSY.	..3
40	2179758-0	1	CONNECTION PLATE	..3
50	2180122-0	1	GEAR SHIFT BRACKET	..3
60	2203870-0	1	FLYWHEEL ASSY. RW	.2
70	2203543-0	2	FITTING SLEEVE	.2
80	Z002106-0	1	S.P. COUPLER	.2
90	9000520-0	12	HEX.SOCK. HD.CAP SCR. ISO 4762-M8x50-10.9-DAC	.2
100	3930103-0	12	WASHER DIN 125-8.4-140HV-A2	.2
110	2180415-0	1	FLYWHEEL MASS	.2
120	3862462-0	9	HEX.SOCK. HD.CAP SCR. DIN 912-M8x60-8.8-A2C	.2
130	2177734-N	1	FLYWHEEL ASSY. RW	.2
135	2180522-0	1	FLYWHEEL MASS (ONLY MO126 & MO156)	.2
137	3862452-0	9	HEX.SOCK. HD.CAP SCR.DIN 912-M8x50-8.8-A2C (ONLY MO126 & MO156)	.2
140	Z026060-0	1	S.P. COUPLER	.2
150	9000685-0	12	LOCKING SCREW-M8x16-10.9	.2
160	2179739-1	1	CONTROL BRACKET ASSY.	.2
170	2180452-0	1	BRACKET, POSITION SENSOR	.2
180	Z002174-0	1	CONTROL MOTOR, CLUTCH	.2
190	Z002195-0	1	ELECTR.CONTROL SYSTEM	.2
200	Z021009-0	3	CONNECTING CABLE	.2
210	Z002175-0	1	RELAISBOX ASSY.	.2
220	2179961-0	1	PROGRAMMED RELAIS, A12	..3
230	2179960-0	1	PROGRAMMED RELAIS, A11	..3
240	2179959-0	1	PROGRAMMED RELAIS, A10	..3
245	9000183-0	2	RELAY 12V 40A	..3
250	Z002178-0	1	GEAR SHIFT CABLE ASSY.	.2
260	2178722-1	2	BRACKET FLYWHEEL HOUSING	.2
270	9000081-0	8	HEX.SOCK.HD.CAP SCR. DIN 912-M12x35-8.8-A3C	.2
280	Z002194-0	1	POSITION SENSOR ASSY.	.2

HEATING UNIT, CIRCULATION PUMP (ACCESSORY)

60124084-0

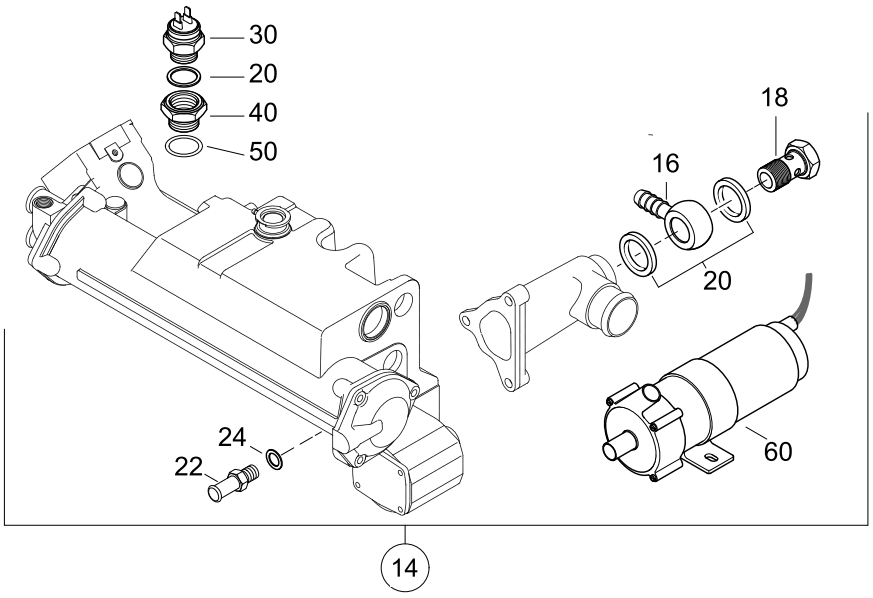

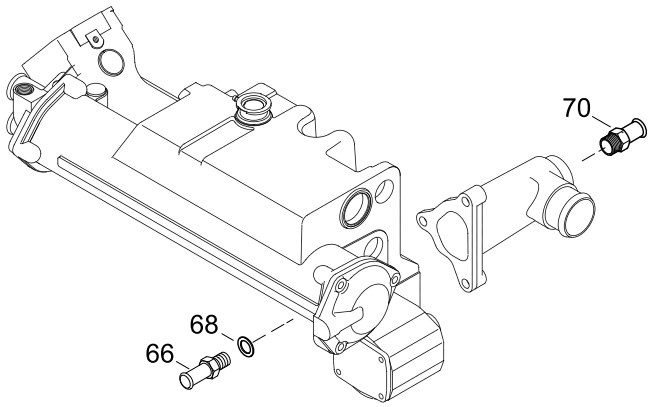

HEATING UNIT, CIRCULATION PUMP (ACCESSORY)

144 MARINE
TURBO DIESEL
+SOLAS

60124084-0

Pos.	Part.-No.	Qty	Designation	Step
14	2178774-2	1	HOT WATER FITT. KIT W. PU. (W/O WATER COOLED TURBO) 48219001—>	.2
16	2178770-0	1	BANJO	..3
18	9000093-0	1	HOLLOW SCREW M22x1,5 DIN 7643-18-A3C	..3
20	3098026-0	3	SEALING RING DIN 7603-A22x27-CU	..3
22	2178698-0	1	NIPPLE HEATER ON OILCOOLER	..3
24	3098013-0	1	SEALING RING DIN 7603-A12x18-CU	..3
30	2178771-0	1	THERMO SWITCH, HEATINGPUMP	..3
40	2180078-0	1	ADAPTER THERMO SWITCH	..3
50	2179242-0	1	O-RING 27x2,5	..3
60	2178772-0	1	CIRCULATION PUMP	..3
66	2178698-0	1	NIPPLE HEATER ON OILCOOLER	.2
68	3098013-0	1	SEALING RING DIN 7603-A12x18-CU	.2
70	2178607-1	1	HOSE CONNECTOR HEATER (TILL —>48218999)	.2