ZF45

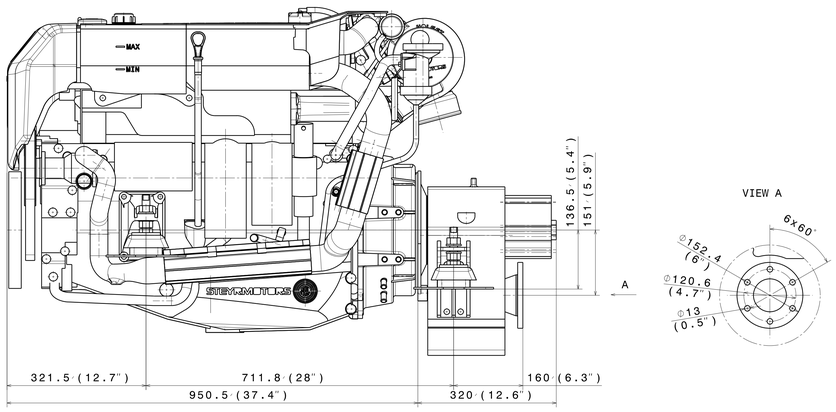

ZF63

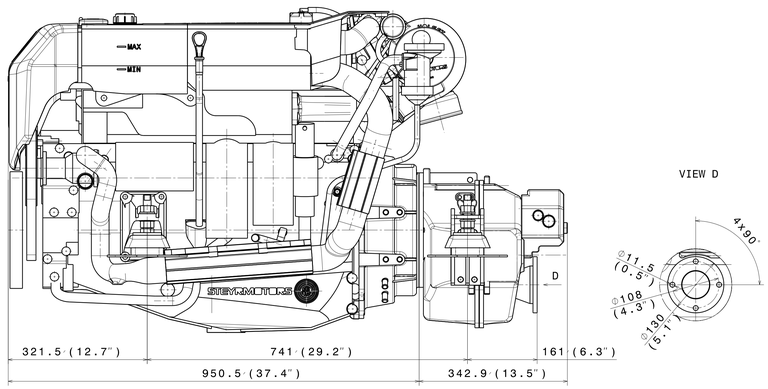

ZF63IV

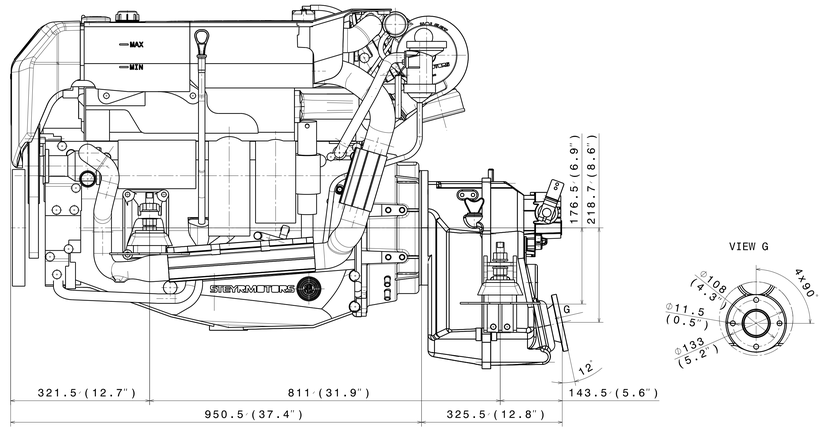

ZF45A

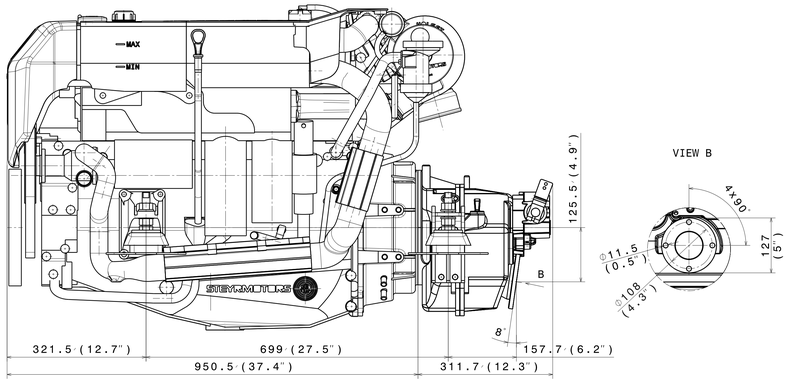

ZF63A

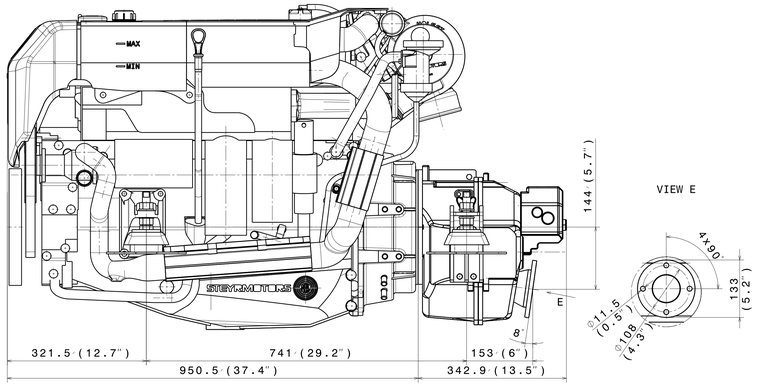

ZF220

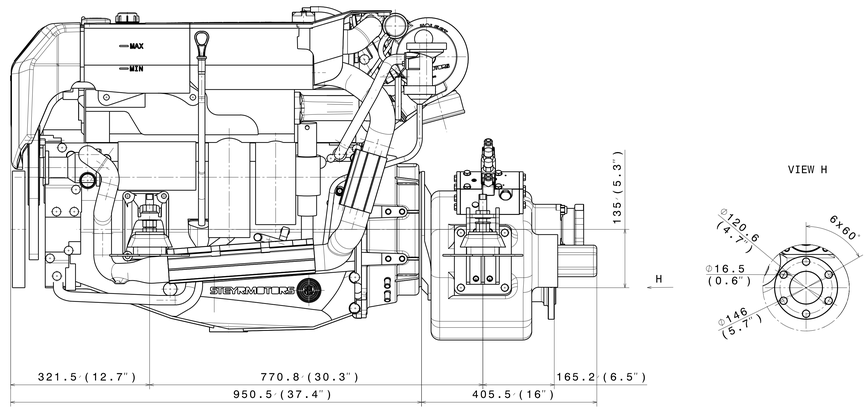

ZF45C

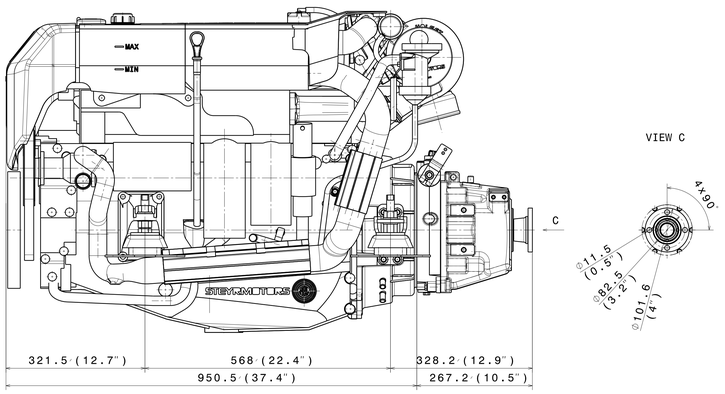

ZF63C

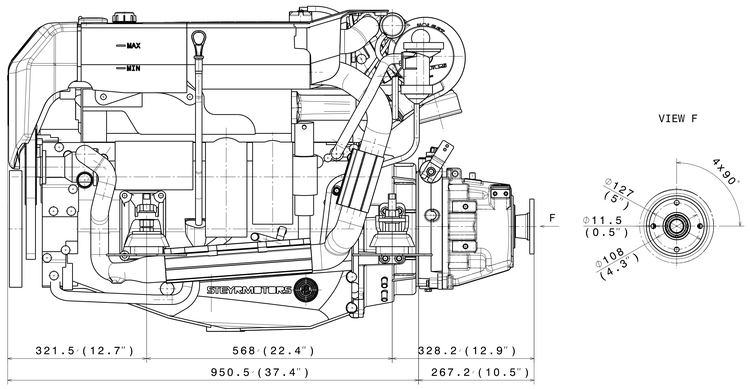

ENGINE TYPE	FLYWHEELHOUSING			GEARBOX													
				ZF45-1	ZF45A	ZF45C	ZF63	ZF63A	ZF63C	ZF63IV	ZF220						
	BOBTAIL	IFG	HYBRID	WITHOUT ENGINE MOUNT	INCLUDING ENGINE MOUNT	WITHOUT ENGINE MOUNT	INCLUDING ENGINE MOUNT	WITHOUT ENGINE MOUNT	INCLUDING ENGINE MOUNT	WITHOUT ENGINE MOUNT	INCLUDING ENGINE MOUNT	WITHOUT ENGINE MOUNT	INCLUDING ENGINE MOUNT	WITHOUT ENGINE MOUNT	INCLUDING ENGINE MOUNT	WITHOUT ENGINE MOUNT	INCLUDING ENGINE MOUNT
SE126E25 WITH ELBOW EXHAUST PIPE	x	x	x	x			x	x		x		x		x		x	x
SE156E26 WITH ELBOW EXHAUST PIPE	x	x	x				x	x		x		x		x		x	x
SE196E35 WITH ELBOW EXHAUST PIPE	x	x	x	x			x	x		x		x		x		x	x
SE196E35 WITH HIGH-RISER EXHAUST PIPE	x	x	x														
SE236E40 WITH ELBOW EXHAUST PIPE	x	x	x				x			x		x		x		x	x
SE236S36 WITH ELBOW EXHAUST PIPE	x	x	x									x		x		x	x
SE236S36 WITH HIGH-RISER EXHAUST PIPE	x	x	x														
SE266E40 WITH ELBOW EXHAUST PIPE	x	x	x				x			x		x		x		x	x
SE266E40 WITH HIGH-RISER EXHAUST PIPE	x	x	x														
SE266S36 WITH ELBOW EXHAUST PIPE	x	x	x									x		x		x	x
SE266S36 WITH HIGH-RISER EXHAUST PIPE	x	x	x														
SE286E41 WITH ELBOW EXHAUST PIPE	x	x	x									x		x		x	x
SE286E40 WITH HIGH-RISER EXHAUST PIPE	x	x	x														
SE306J38 WITH ELBOW EXHAUST PIPE	x	x	x									x		x		x	x

IF THE ENGINE MOUNT IS ON THE GEARBOX, THERE IS NO ONE AT THE FLYWHEELHOUSING!

ERRORS AND TECHNICAL MODIFICATION SUBJET TO CHANGE

Merkmale mit besonderer Bedeutung
SPECIAL CHARACTERISTICS

Allgemeintoleranzen
GENERAL TOERANCES
DIN ISO 2768-mH

AND/
OR

Kanten nach EDGES ACC. TO DIN ISO 13715 — Tolerierung TOLERANCES DIN ISO 8015

Oberflaechen nach SURFACE-TEXTURE ACC. TO DIN EN ISO 1302

ISO-Grenzmasse und Passungen nach ISO-LIMITS AND FITS ACC. TO DIN ISO 286

Form- und Lagetolerierung nach GEOMETRIC TOLERANCING ACC. TO DIN EN ISO 1101

Allg. Gewindetoleranzen 6H/6g nach GEN. THREAD-TOLERANCES 6H/6g ACC. DIN ISO 965-1

Aenderungsbeschreibung/DESCRIPTION:

Feld ZONE	Index INDEX	MODIFICATION DATE	NAME	Aenderungs-Nr. REV.NO.	Reifegrad

Keine Aenderung ohne schriftliche Genehmigung
NO ALTERATIONS WITHOUT WRITTEN APPROVAL

Technischer Verantwortlicher
DESIGN RESPONSIBLE

NAME:		Tel./EXT.
gez.	120322	Glei8
gepr.	120322	Boxleitner
gen.		
norm.		

Format/SIZE A0
Masstab/SCALE 1:5
METRIC
FIRST ANGLE PROJECTION

STEYRMOTORS
INNOVATION WITH LIGHTNESS

IN ALL CASES THE GERMAN-LANGUAGE VERSION OF THIS DRAWING SHALL BE TAKEN AS AUTHORITATIVE

Rohteil-Nr./BLANK NO.
Rohteilgewicht BLANK WEIGHT Kg — Fertiggewicht MACHINED WEIGHT Kg
Teil aehnl./SIMILAR PART
Zusammenst./NEXT ASSY
Werkstoff/MATERIAL:
Endzustand/FINAL CONDITION:
Benennung/TITLE:

6 CYL. IFG INSTALLATION DRAWING FOR GEARBOX

Zeichnungs-Nr./DRAWING NO.
Funkt. Gr. FCT GRP
Blatt SHEET 1 von OFF 1
Aenderungen nur ueber MODIFICATIONS ONLY BY CAD-SYSTEM: CATIA V5
3D-
CAD-Format: SMT_A0 0502
TYP:

Eigentum der STEYR MOTORS GmbH. Ohne unser Einverstaendnis Ueberlassung an dritte Personen oder Veroeffentlichung nach den gesetzlichen Bestimmungen verboten.
Schutzvermerk nach ISO 16016 beachten.

Property of STEYR MOTORS GmbH. Transfer to third parties or publication without our consent is prohibited by law.
Copyright reserved according to ISO 16016.

Abmasse DEVIATIONS — toleriertes Mass TOLERANCED SIZE
Projekt Nr.:

0 10 20 30 40 50 60 70 80 90 100 DIMENSIONS ARE IN MILLIMETERS

MATRIX_ENGINES+GEARBOX.jpg